ATTACHMENT 1 - PROPONENT'S SUBMISSION MATERIALS

TORONTO Building

Sign By-law

Sign By-law Amendment Application

For Enquiries Dial 311
From Outside the City of Toronto (416) 392-CITY (2489)

Request Date			Folder No.
09 (Day)	10 (Month)	12 (Year)	12-259600

Sign Location

Street No.	Street Name	Lot No.	Plan No.
486	Evans Avenue	PART OF LOT 8	CONCESSION 3

If this is an application for more than one property of a Signage Master Plan, please attach a schedule of all properties the proposed amendment will apply to.

Describe the sections of the Sign By-law that require amendment:

(1) 694 - 24 A (1) new sign is within 400 meters of any limit of the F.G Gardiner Expressway,
(2) 694-25 B (1) (a) new sign to be 62.43 sq meters
(3) 694 - 25 B (b) new sign to be 13.75 meters in overall height.
(4) 694 - 9 B new sign to have 20 year permit
(5) 694-18 sign to be illuminated 24 hrs per day

Please provide the reasons/justification for the amendment (Attach any supporting documentation or additional pages as required):

To supply later

Property Owner Information

Last Name		First Name	
Company Name (if applicable) 486 EVANS CENTRE INC.			Area Code and Telephone No. 416 635 0221
Street No. & Name 1244 Caledonia Road.		Apt./Unit No.	Area Code and Mobile / Pager No.
City Toronto	Province Ontario	Postal Code M6A 2X5	Area Code and Fax No. 416 635 0221

E-mail address
dpruss@firmcapital.com

Attachments Required

- Copies of any supporting documents and all necessary plans and specifications required to support the Sign By-law Amendment(s) requested.
- Sign By-law Amendment Data Sheet.

Applicant's Declaration and Information

I,	Last Name Dzeko		First Name Roy	
	Company Name (if applicable) CBS Outdoor			Area Code and Telephone No. (416) 521-6441
of	Street No. and Name 377 Horner Ave		Apt./Unit No.	Area Code and Mobile / Pager No.
	City Toronto	Province Ontario	Postal Code M8W 1Z6	Area Code and Fax No. (416) 255-2063

E-mail address
rdzeko@cbsoutdoor.ca

do hereby declare the following:

That I am
- ☐ the Property Owner as stated above
- ☐ an officer/employee of ..... which is an authorized agent of the owner.
- ☑ the owner's authorized agent
- ☐ an officer/employee of ..... CBS Outdoor ....., which is the Property Owner's authorized agent.

- That statements contained in this application are true and made with full knowledge of all relevant matters and of the circumstances connected with this application.
- That the plans and specifications submitted are prepared for the Sign By-law Amendment(s) described and are submitted in compliance with copyright law.
- That the information included in this application and in the documents filed with this application is correct.
- That statements contained in this application are true and made with full knowledge of all relevant matters and of the circumstances connected with this application.

Digitally signed by Roy Dzeko
DN: cn=Roy Dzeko, o=CBS Outdoor, ou=Real Estate, email=rdzeko@cbsoutdoor.ca, c=CA
Date: 2012.09.11 09:56:33 -04'00'

Applicant's Signature	Print Name	Date
	Roy Dzeko	09/11/2012

The personal information on this form is collected under the authority of ss. 8 and 110 of the *City of Toronto Act, 2006*, and Chapter 694, Signs, General, of the City of Toronto Municipal Code, and will be used specifically for the purpose of creating and maintaining a record available to the general public concerning signs and permit information, evaluation of applications made under Chapter 694, Signs, General, issuance, denial and revocation of permits under Chapter 694, Signs, General, processing applications for variances from and amendments to Chapter 694, Signs, General, creating aggregate statistical reports, enforcement of City of Toronto Municipal Code Chapter 694, Signs, General, Chapter 771, Taxation, Third Party Sign Tax, and any other applicable sign by-law of the City of Toronto, and contacting permit holder(s) or authorized agent(s). Questions about this collection may be referred to the Manager, Sign By-law Unit, at Toronto, Building, City Hall, 100 Queen St W, 12th Floor, East Tower, Toronto, ON, M5H 2N2, Telephone: 416-392-8000

TORONTOBuilding

Sign By-law Unit

Sign By-law Amendment Data Sheet

For Enquiries Dial 311
From Outside the City of Toronto (416) 392-CITY (2489)

Request Date			Folder No.
09 (Day)	10 (Month)	12 (Year)	12-259600

This data sheet forms part of an application for a Variance From Chapter 694 of the Toronto Municipal Code, Signs

Sign Location

Street No.	Street Name	Lot No.	Plan No.
486	Evans Avenue	PART OF LOT 8	CONCESSION 3

Site and Building Data

Lot Area: 3.06 acres	Lot Frontage: 206'	Lot Depth: 653.5'
Number of Buildings on the lot: 1	Date of Construction of Building(s) if known: late 1960's	
Building Height(s): 17'	Number of Storeys: 1	Building(s) Gross Floor Area: 74,475 sq ft
Building Use(s): Industrial		

Site Context

Please describe the land uses, buildings and sign districts surrounding the proposal (use additional pages if necessary):

North: Employment Sign District , Light Industrial Uses,

South: Employment Sign District , Light Industrial Uses

East: Employment Sign District, Light Indusrial Uses

West: Employment Sign District , Light Industrial Uses

Proposal

Please describe in detail what is being proposed (use additional pages if necessary):

Build One (1) 14 ' 48' Double Face ground sign to contain "Electronic Static Copy" with an overall height of 45' 20 year permit requsted and sign to be illuminated 24 hours similar to other operators along the F.G Gardiner

Rationale

Please describe a rationale to support this proposal, including references to the City of Toronto Official Plan and any other Area Plans or Studies that have been completed (use additional pages if necessary):

SIGN BY-LAW AMENDMENT
486 EVANS AVENUE
WARD 6, ETOBICOKE-LAKESHORE

Overview

CBS Outdoor is seeking site specific amendments to Chapter 694, Signs, to permit a proposed third party ground sign containing double-sided electronic static copy for 20 years. The sign will have illuminated electronic static copy 24 hours a day, which is consistent with other signs in the vicinity. The approval of the proposed ground sign will benefit the City of Toronto in a variety of ways including:

1. Upon approval of the proposed sign application located at 486 Evans Avenue, CBS Outdoor will remove a total of four existing legal non-conforming third party roof signs at:

    i. 486 Evans Avenue
    ii. 3290 Lakeshore Road
    iii. 273 College Street
    iv. 134 Park Lawn Road

    Please see Attachment 1

2. The approval of the sign permit will result in a net tax benefit to the City of Toronto

3. CBS Outdoor will allocate 5% of the sign time on the new illuminated sign at this location for the City of Toronto's requirements as may be requested by the City

4. Notwithstanding, the 24 hour illumination, CBS Outdoor will comply with the controlled reduction in the luminosity and brilliance of the sign, in relation to ambient light level, at dusk and dawn and prevention of light spill and light trespass on sensitive land uses

5. The approval of the new sign permit will also help the City of Toronto achieve its goal of waste reduction and improving the environment by significantly reducing the use of vinyl in outdoor signage

Therefore, by removing the above referenced 4 legal non-conforming roof signs, CBS Outdoor is reducing the square footage of roof top sign faces associated with this application by almost 20 percent.

As you are aware, the above noted four existing legal non-conforming third party roof signs are currently held by CBS Outdoor and are valid in perpetuity.

As such, these signs can remain on the premises for an indefinite period despite changes or redevelopment of the surrounding neighbourhood. If our application is approved, there will be an automatic review of the sign permit where the City of Toronto can choose to revoke said permit should conditions change.

In our opinion, the proposal to remove the existing roof sign located on the premises along with the three above noted locations (totalling 4 roof signs)in exchange for a newly designed ground sign containing double-sided electronic static copy is a reasonable compromise and consistent with the advancement of the public interest as contemplated by the New City of Toronto Sign By-law.

The Context

An existing two-sided, third-party illuminated "V" shape roof sign containing static copy is located on top of the building at 486 Evans Avenue. Each face of the existing roof sign is 6.1metres long and 3.05 metres high and has an area of 18.61 square metres. The permit for the existing roof sign, No. 01-106149 SGN00SP was originally granted by City of Toronto on April 23, 2001.

The current single-storey light industrial building on the premises at 486 Evans Avenue at the location is situated on the north side of Evans Avenue, south of the Gardiner Expressway and within an E-Employment sign district where third party ground signs are permitted. The abutting properties to the south of the Gardiner Expressway are mostly one storey light industrial buildings within the same sign district. To the immediate east and to the immediate west are also mostly one storey light industrial buildings within the same sign district.

The properties located to the south side of Evans Avenue are mostly one or two-storey residential buildings separated by a distance of more than 215 metres from the proposed ground sign location. ***(Attachment 2)*** This is over seven times the required separation distance of 30 metres from an R-Residential sign district as is stipulated in the new City of Toronto Sign By-law.

The ground signs located on the neighbouring industrial properties are within close proximity to the Gardiner Expressway. Most of the third party signs containing electronic static copy were approved prior to the enactment of the current Sign By-law. As such, the proposed ground sign containing electronic static copy would not have any adverse impact on these adjacent properties as many of them contain similar sign attributes including containing electronic static copy in their respective signs on their premises. Therefore, the proposal is consistent with the buildings and features of other properties within 120 metres.

The proposed sign setback is at 1.0 metre from the northerly property line. The proposed sign will have a separation distance of 285 metres from the nearest third party sign located in the general vicinity. The building on the premises is situated in such a way that there are generous setbacks to both the front, back and side yard lot lines. This configuration of setbacks in turn provides for safe visibility for the traffic flow for those on the premises and those observing the sign on the Gardiner Expressway. The proposed ground sign is designed and positioned along the north frontage of the property in such a way that it does not block any view corridor or sightlines for the vehicular or pedestrian traffic. Additionally, the removal of the existing "V" shape roof sign located on top of the building will help to enhance the building sky line.

Other than the exceptions noted above, it is the intent of CBS Outdoor to comply with all of the City of Toronto's goals and objectives outlined in Chapter 694. CBS Outdoor intends to support the City of Toronto's goals by:

a. Entering into an agreement with Bull Frog Power for the supply of clean energy

b. Ensuring no up-lit signs which complies with the City of Toronto's adopted "Bird's–friendly Guidelines

c. Reducing the luminosity and brilliance of the sign, in relation to ambient light level, at dusk and dawn

d. Complying with all the illumination provisions in Chapter 694 by maintaining the light levels within 6.5 lux above the ambient lighting level including no up-lit signs and ensuring that the illumination of the sign will not exceed 500 nits during the period between sunset and sunrise and the illumination will not exceed 5000 nits during the period between sunrise and sunset.

Traffic Safety and Environmental Benefits

The proposed ground sign at this location is appropriate and would not have adverse affect on traffic safety given the research we have conducted on the principle previously. In fact, three studies of the relationship between digital Billboards and Traffic Safety were conducted by ***Tantala Associates, LLC, Consulting Engineers*** in Albuquerque New Mexico (March 2010), Greater Reading Area, Berks County, Pennsylvania (August 2010) and Richmond Virginia (November 2010). These studies concluded that, "digital billboards have no statistical significant relationships with the occurrence of accidents." The studies also found that, "the age of drivers and the time of day are neutral factors which show no significant increase in accident rates near the digital billboards." These conclusions are based on statistical police data and objective statistical analysis.

Furthermore, here in Ontario, the City of Ottawa has recently amended their existing Sign By-law by permitting electronic static copy on private properties. The City of Ottawa's report summarized that there was, "minimal material change to public safety with regards to the electronic static copy signs." ***(Report to Ottawa City Council Ref #ACS2012-PAI-PGM-0185 September 14, 2012).***

The City of Ottawa report also highlighted that community time provided to the City will assist in communicating important messages of any kind including those of an emergency nature to its citizens. In fact, the report outlined an incident in the City of Minneapolis, where a bridge on the I-35 W freeway collapsed and private digital display signs were used to alert oncoming motorists.

Finally, the Ottawa Report also recognises that there is a reduction in landfill as a result of the reduction of toner, paper, ink and glue waste as well as less vehicular emissions because signs are remotely programmed and do not require printing of paper or vinyl sign copy or vehicles and equipment to manually change and dispose of the advertisements. ***(Report to Ottawa City Council Ref #ACS2012-PAI-PGM-0185 September 14, 2012)***

Furthermore, the proposed electronic static sign located at 486 Evans Avenue will be designed and certified by a professional engineer and will be built in accordance with all the requirements outlined in the Ontario Building Code.

Provincial Issues

The Ministry of Transportation for the Province of Ontario has confirmed that 486 Evans Avenue falls outside of the ministry sign permit control. A ministry sign permit is not required for the proposed east and west facing LED billboard sign at 486 Evans Avenue. ***(Attachment 3)***

Conclusion

We believe our application for a double-sided electronic ground sign at the northerly portion of 486 Evans Avenue would not have any adverse impact on the subject property, the surrounding community or traffic safety and is of net benefit to the City of Toronto, providing for community time, a better environment and a significant reduction of roof signage which overall advanced of the objectives of the City of Toronto with its current sign by law goals.

Attachment 1

Signs to be Removed

Attachment 2

Distance of CBS Sign to Residential Areas

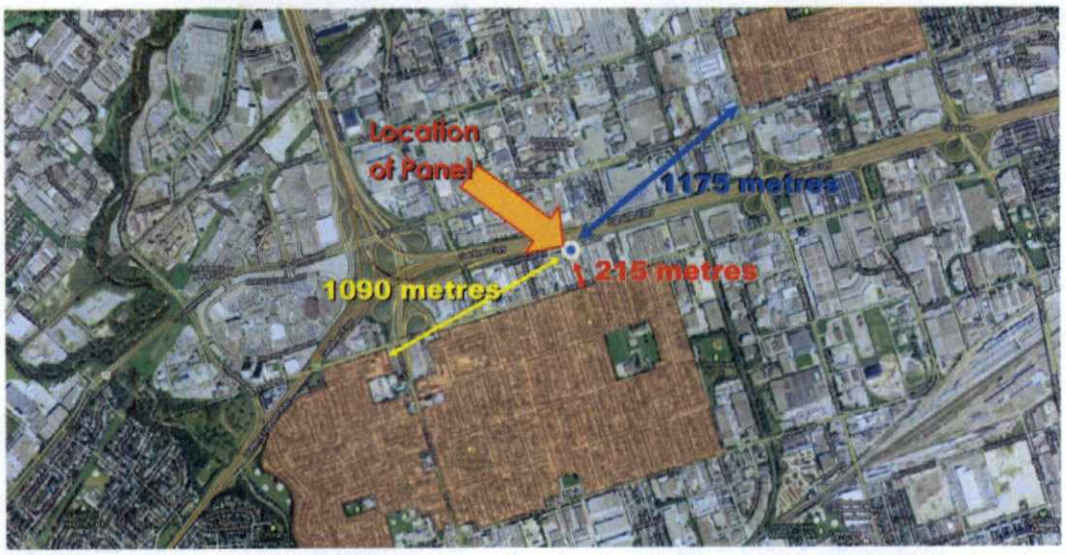

LEGEND

Residential Areas

CBS OUTDOOR

Attachment 3

Email from Ministry of Ontario

Dzeko, Roy

From: Merey, Sabina (MTO) [Sabina.Merey@ontario.ca]
Sent: Monday, February 04, 2013 1:09 PM
To: Dzeko, Roy
Cc: McGregor, Stephen; Panza, Mario (MTO)
Subject: RE: 486 Evans

Hi Roy,

The ministry's sign permit control extends 400 m from any ministry property line. In this instance, 486 Evans Avenue falls outside of ministry sign permit control. A ministry sign permit is not required for the proposed east- and west-facing LED billboard sign at 486 Evans Avenue.

Regards,

Sabina

From: Dzeko, Roy [mailto:rdzeko@cbsoutdoor.ca]
Sent: February 4, 2013 9:46 AM
To: Merey, Sabina (MTO)
Cc: McGregor, Stephen
Subject: 486 Evans

Good Morning Sabina

Nice to speak with you last week

Please see attached a drawings showing the location of our proposed Double Faced ground sign facing east and west to be located at 486 Evans Ave.

Could you please re - confirm that the proposed new sign is not within 400 meters of MTO lands and that there is no objection from MTO for CBS Outdoor installing such a sign at the above noted address.

Thank You

Roy Dzeko
Real Estate & Business Development

CBS OUTDOOR CANADA | 377 Horner Avenue | Toronto, Ontario | M8W 1Z6
Tel. 416-521-6441 | Fax. 416-255-2063 | rdzeko@cbsoutdoor.ca
www.cbsoutdoor.ca | Follow us:

METRIC: DISTANCES SHOWN ON THIS PLAN ARE IN METRES AND CAN BE CONVERTED TO FEET BY DIVIDING BY 0.3048.

NO R, RA OR OS SIGN DISTRICT WITHIN 30m RADIUS

SIGN IS WITHIN 400m OF QEW

NO 3rd PARTY SIGNS WITHIN 100.0m RADIUS OTHER THAN SHOWN

SKETCH SHOWING LOCATION OF PROPOSED 14'X48' DOUBLE FACE LED

No. 486 EVANS AVENUE

CITY OF TORONTO

(FORMERLY IN THE CITY OF ETOBICOKE)

SCALE 1 : 1000

20 10 0 20 40 60 80 100 METRES

© COPYRIGHT SCHAEFFER DZALDOV BENNETT LTD.

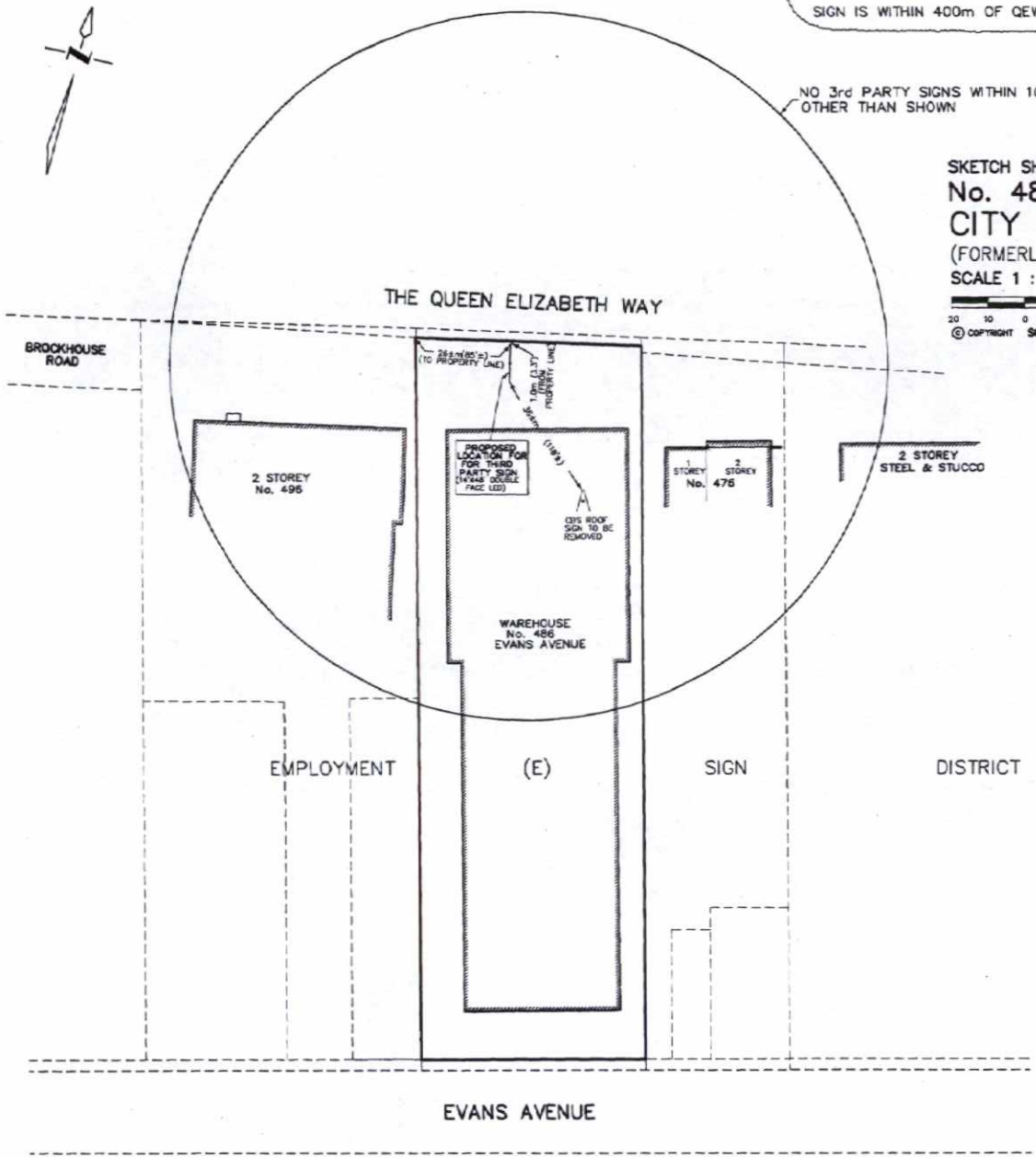

CAUTION

ALL MEASUREMENTS SHOWN ARE TO THE PROPOSED THIRD PARTY SIGN.

SURVEYOR'S CERTIFICATE

THIS SKETCH IS NOT A PLAN OF SURVEY AND SHALL ONLY BE USED FOR THE PURPOSE INDICATED IN THE TITLE BLOCK.

DATE: JULY 9, 2012.

DAN DZALDOV
ONTARIO LAND SURVEYOR

SCHAEFFER DZALDOV BENNETT LTD.
ONTARIO LAND SURVEYORS
84 JARDIN DRIVE CONCORD, ONTARIO L4K 3P3 TEL.(416)967-0101

DRAWN ACAD/LN	CHECKED DD	SCALE 1:1000	JOB NO. 06-545-01

SCHAEFFER DZALDOV BENNETT LTD.
Ontario Land Surveyors

Ophir N. Dzaldov,
B. Sc., O.L.S., O.L.I.P.

Dan Dzaldov,
B. Sc., O.L.S., O.L.I.P.

Wm. E. Bennett,
O.L.S., O.L.I.P.

W. M. Fenton,
O.L.S., O.L.I.P.

Tom Kristjanson,
B. Sc., O.L.S., O.L.I.P.

Richard A. Preiss,
B. Sc., O.L.S., O.L.I.P.

Devanand Venay,
B.Tech., O.S.T.

Fred Schaeffer,
B. Sc., P. Eng., O.L.S. Ret.

SURVEY RECORDS SINCE 1850s of:

ANTON KIKAS
BENNETT & NORGROVE
BENNETT YOUNG
BROWNE CAVELL & JACKSON
D.J. NORGROVE

H.C.J. WHEELER
H.G. ROSE
H.H. GIBSON
H. KOESTER
J.K. YOUNG

J.T. RANSOM
M.J. MCALPINE
MILLESSE & BURTON
OPHIR N. DZALDOV
P.J. MCGUINESS

RICHARD A. PREISS
ROBERT BASIL LEE
ROBERT J. KINGSTON
R.H. GEYER SURVEYING LTD.
SCHAEFFER & DZALDOV

SCHAEFFER & PARKER
SCHAEFFER & REINTHALER
WILDMAN HADFIELD STEWART
WILSON & BUNNELL
W.M. FENTON

July 9, 2012

City of Toronto
2 Civic Centre Court
3rd Floor
Toronto, Ontario
M9C 5A3

Attention: Mr. Robert Bader

Re: 486 Evans Avenue
Part of Lot 8, Concession 3, C.S.T.
City of Toronto (formerly Etobicoke) – Our Job No. 09-545-01

The attached sketch dated July 9th, 2012 was prepared by my office based on Registry records and field verification and is correct as of the date shown. This sketch is prepared to illustrate the locations as they relate to the regulations outlined in Chapter 694, Signs, General, of the City of Toronto Municipal Code.

If further information is required, please contact the undersigned.

Yours truly,

SCHAEFFER DZALDOV BENNETT LTD.

Dan Dzaldov, B.Sc., O.L.S., O.L.I.P.
DD/pl

Submitted by: Roy Dzeko, CBS Outdoor Canada

I hereby certify the accuracy of the attached Sketch submitted herewith

64 Jardin Drive, Unit 1, Concord, Ontario L4K 3P3 Tel: (905) 761-0101 Fax: (905) 761-0119
Bancroft: (613) 332-3237 Beeton: (905) 729-2689 Uxbridge: (905) 852-1033 Toronto: (416) 987-0101 E-mail: office@surveyontario.com

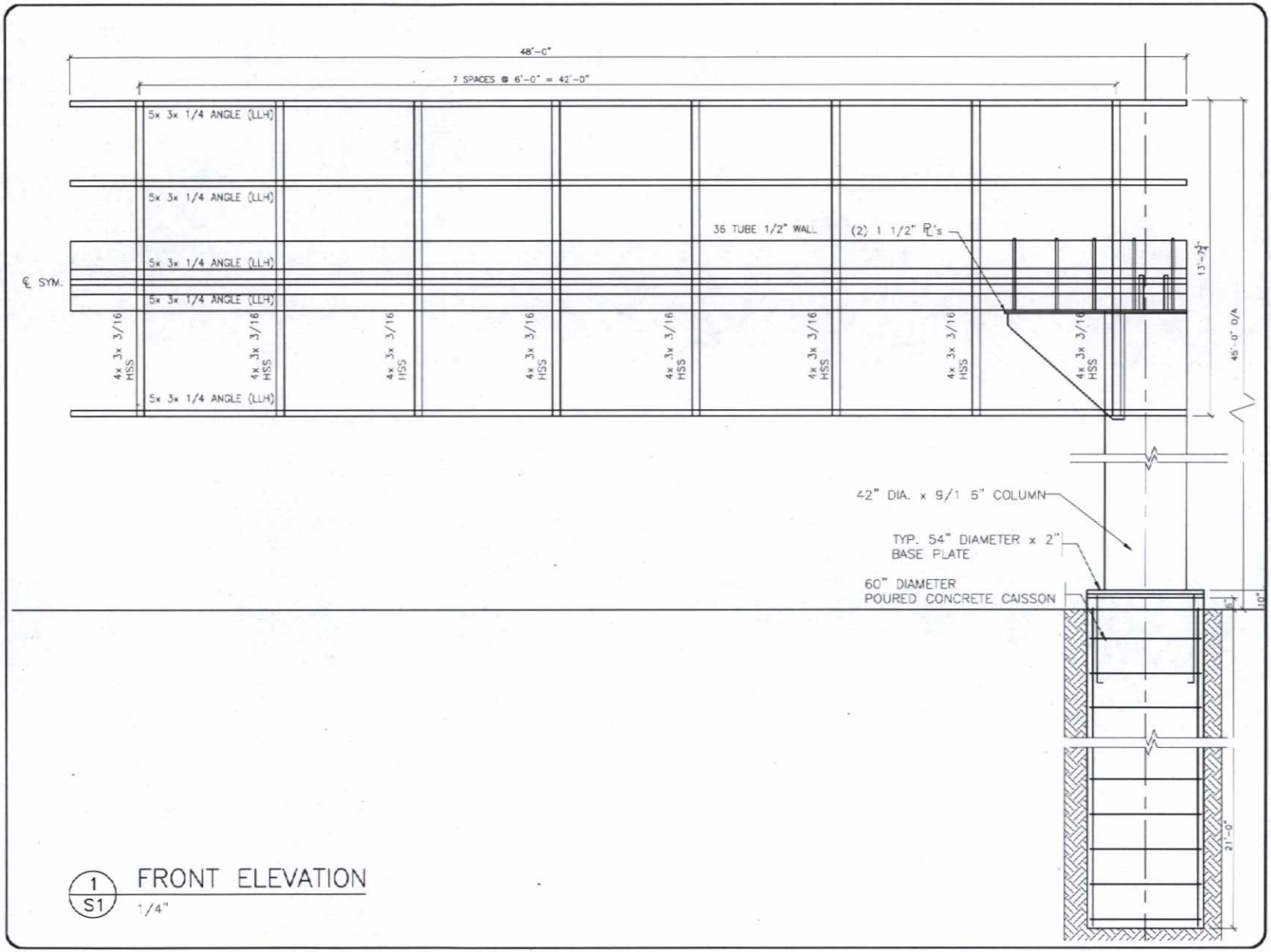

1
S1

FRONT ELEVATION

1/4"

GENERAL NOTES

ALL DRAWINGS AND STRUCTURAL INFORMATION ARE THE PROPERTY OF THE ENGINEER.

DO NOT SCALE DRAWINGS.

ALL DIMENSIONS AND SITE CONDITIONS TO BE CHECKED AND VERIFIED ON SITE BY THE CONTRACTOR BEFORE COMMENCING ANY WORK. INFORM ENGINEER OF ANY DESCREPANCIES IN WRITING AND OBTAIN WRITTEN APPROVAL FROM THE ENGINEER BEFORE PROCEEDING.

ALL CONSTRUCTION TO BE CARRIED OUT IN ACCORDANCE WITH ALL LOCAL CODES AND AUTHORITIES HAVING JURISDICTION.

No.	DATE	BY	DESCRIPTION
2	SEPT. 12		RE-ISSUED FOR BLDG. PERMIT
1	SEPT. 12		ISSUED FOR BLDG. PERMIT

STAMP

LICENSED PROFESSIONAL ENGINEER
S P HART
SEPT. 2012
PROVINCE OF ONTARIO

CBS OUTDOOR

CBS OUTDOOR Inc.
377 Horner Avenue
Toronto, Ontario M8W 1Z6

S.P.HART & ASSOCIATES LTD.
120 Carlton St. Suite 412
Toronto, Ontario M5A 4K2
Tel. (416) 413-9700
Fax. (416) 413-1343

PROJECT/LOCATION
14'-0" x 48'-0" LED GROUND FLAG DISPLAY
DOUBLE SIDED
486 EVANS AVENUE
Toronto, Ontario

DRAWING TITLE
FRONT ELEVATION

DRAWN BY	FJV	DWG. No. S1
DATE	AUG. /12	OF 6
ENG. No.		
SCALE:	AS NOTED	

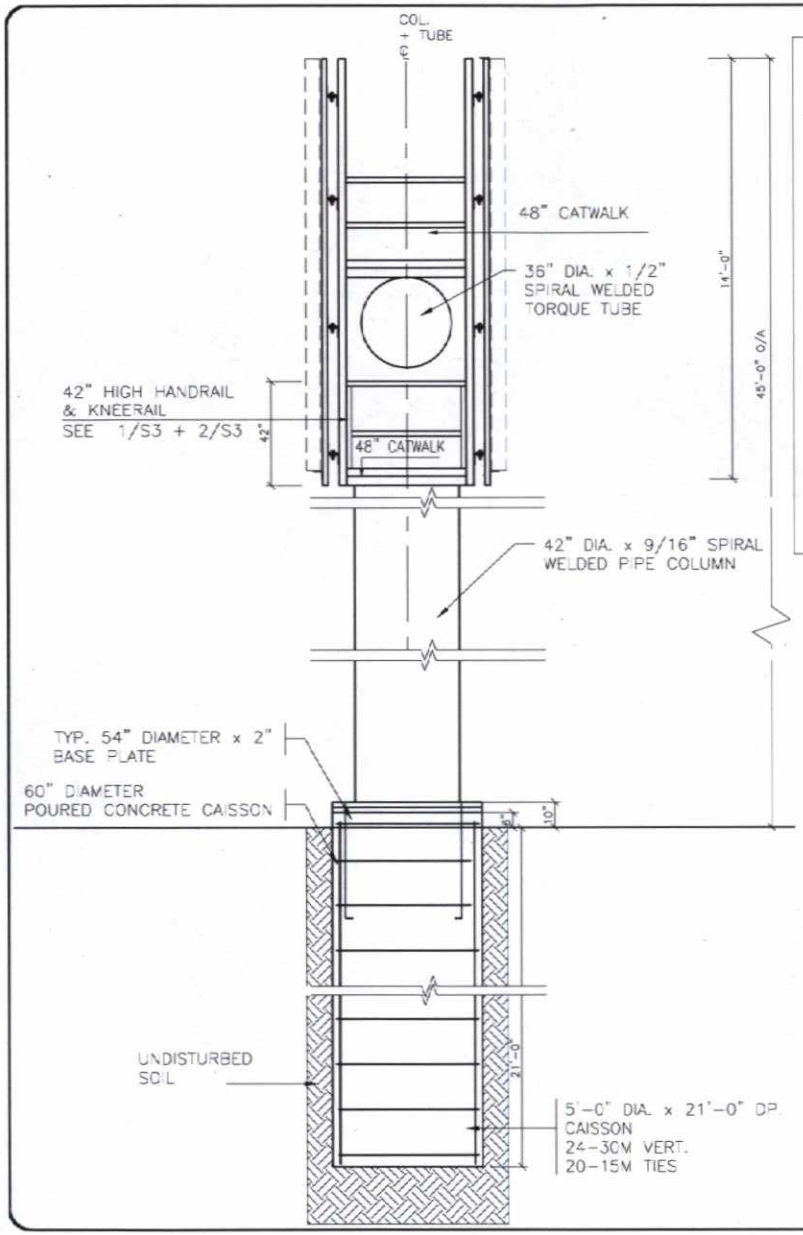

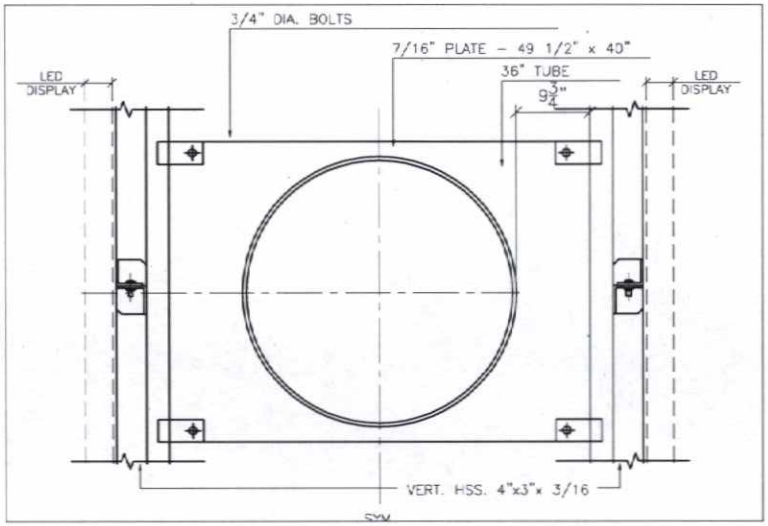

3/S2 DETAIL AT 4x3 HSS SUPPORT

3/4"

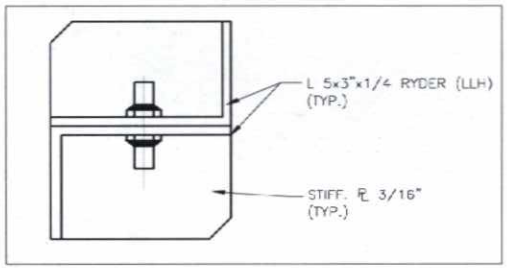

2/S2 DETAIL HORIZ. RYDER (TYP. 4 LOCATIONS)

3"

1/S2 SECTION THRU SIGN

1/4"

GENERAL NOTES

ALL DRAWINGS AND STRUCTURAL INFORMATION ARE THE PROPERTY OF THE ENGINEER.

DO NOT SCALE DRAWINGS.

ALL DIMENSIONS AND SITE CONDITIONS TO BE CHECKED AND VERIFIED ON SITE BY THE CONTRACTOR BEFORE COMMENCING ANY WORK. INFORM ENGINEER OF ANY DESCREPANCIES IN WRITING AND OBTAIN WRITTEN APPROVAL FROM THE ENGINEER BEFORE PROCEEDING.

ALL CONSTRUCTION TO BE CARRIED OUT IN ACCORDANCE WITH ALL LOCAL CODES AND AUTHORITIES HAVING JURISDICTION.

No.	DATE	BY	DESCRIPTION
2	SEPT. 12		RE-ISSUED FOR BLDG. PERMIT
1	SEPT. 12		ISSUED FOR BLDG. PERMIT

STAMP

CBS OUTDOOR

CBS OUTDOOR Inc.
377 Horner Avenue
Toronto, Ontario M8W 1Z6

S.P.HART & ASSOCIATES LTD.
120 Carlton St. Suite 412
Toronto, Ontario M5A 4K2
Tel. (416) 413-9700
Fax. (416) 413-1343

PROJECT/LOCATION
14'-0" x 48'-0" LED GROUND FLAG DISPLAY
DOUBLE SIDED
486 EVANS AVENUE
Toronto, Ontario

DRAWING TITLE
SECTION AND DETAILS

DRAWN BY	FJV	DWG. No.	S2
DATE	AUG. /12		
ENG. No.		OF	6
SCALE:	AS NOTED		

GENERAL NOTES:

1. ALL STRUCTURAL STEEL ROLLED SECTIONS AND PLATES SHALL BE M300W STEEL AND COMPLY WITH THE REQUIREMENTS OF CSA SPECIFICATIONS CAN3-G40.21
2. STRUCTURAL HOLLOW STEEL SECTIONS SHALL COMPLY WITH THE REQUIREMENTS OF CSA SPECIFICATION G40.21 GRADE M350W.
3. ALL STRUCTURAL BOLTS, NUTS AND WASHERS USED IN CONNECTIONS, SHALL BE GALV. HIGH STRENGTH TO ASTM STANDARD A325 AND SHALL BE TORQUED IN ACCORDANCE WITH TABLE 8 OF CSA SPECIFICATION S16.
4. ALL WELDS AND WELDING SHALL COMPLY WITH THE REQUIREMENTS OF CSA SPECIFICATION W59. USE E480XX ELECTRODES. WELDING INSPECTION REPORT STAMPED AND SIGNED BY A PROFESSIONAL ENGINEER CERTIFIED IN ONTARIO IS REQUIRED ALL MAJOR WELDS.
5. WHERE MEMBERS ARE WELDED TOGETHER THE WELDS SHALL DEVELOP THE FULL CAPACITY OF THE MEMBERS IN BENDING AND SHEAR.
6. ANCHOR BOLTS, AND BOLTS THROUGH MASONRY SHALL COMPLY WITH THE REQUIREMENTS OF ASTM STANDARD A307. NUTS, BOLTS, RODS & WASHERS TO BE GALVANIZED.
7. DESIGN WIND PRESSURE IS BASED ON NBC SUPPLMENT FIG. B.14, 50 DEGREE ANGLE.

   Fn= Cf Cn q Cg Ce h
   = 1.15 X 1.0 X 0.53 X 2.5 X 1.1 X 4.27 X 14.63
   = 104.71KN (UNFACTORED)
8. ALL STEEL IS TO BE COATED WITH TWO COATS OF OXIDE PRIMER AND TWO COATS CHOCOLATE BROWN OUTDOOR ALKYD PAINT.
9. ENGINEER IS TO REVIEW INSTALLATION FOR GENERAL CONFORMANCE TO DRAWINGS. (SEAN HART P.ENG 416-209-8098).
10. GROUT FOR EMBEDDED BARS AND UNDER BASE PLATE TO BE "EMBED" GROUT BY SIKA/STERNSON.
11. ALL HOLLOW SECTIONS, COLUMNS, ETC. THAT ARE CLOSED AT THE ENDS ARE TO HAVE MINIMUM (2) 1/4" DIA. WEEP HOLES AT THE UNDERSIDE OR TOP AND BOTTOM.
12. "MUNICIPAL BYLAW COMPLIANCE BY OTHERS THAN S.P.HART & ASSOCIATES LTD. AND SEAN HART, P. ENG."

TABLE 1.1 ONE POST GROUND MOUNT FLAG

POSTER PANEL HT.	DIA. OF CAISSON	DEPTH OF CAISSON	VERT. RE-BARS	# OF TIES	COL. SIZE
45'-0"	60"	21'-0"	(24) 30M	(20) 15M	42" DIA.x 9/16"

LEGEND

MK.	SIZE (IMPERIAL)	SIZE METRIC	MATERIAL	COMMENTS
K1	L 3x2x 1/4 (LEG-UP)	L76x51x 6.4 (LLV)	M300W STRUCT. STEEL	BOTTOM RAIL
K2	L 2x2x 1/4 (LEG-DN)	L51x51x 6.4	M300W STRUCT. STEEL	BOTTOM X-PIECE
K3	HSS 4x4x1/4	HSS 100x100x6.4	M300W STRUCT. STEEL	SUPPORT BRACKETS
M1	L2x2x 1/4	L51x51x 6.4	M300W STR. STL.	MIDDLE RAIL
T1	L2x2x 1/4	L51x51x 6.4	M300W STR. STL.	TOP RAIL
J1	L3x2 1/2 x 1/4	L76x64x 6.4 (L L OUT)	M300W STR. STL.	STANCHION

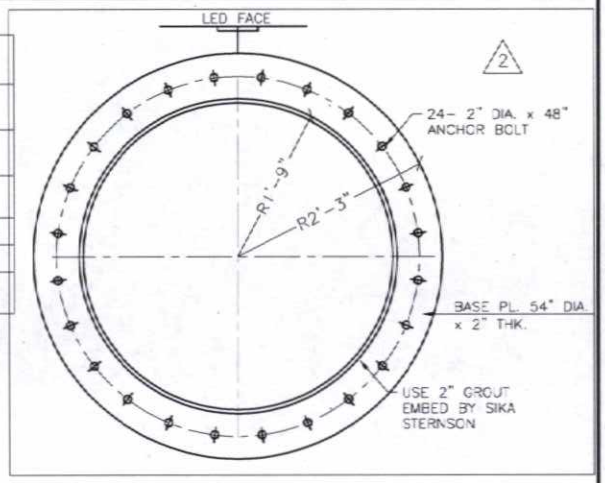

3 / S3 COLUMN DETAIL
3/4"

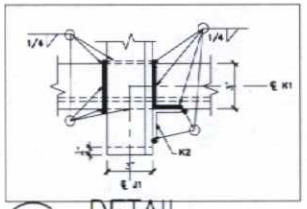

4 / S3 DETAIL
3/4"

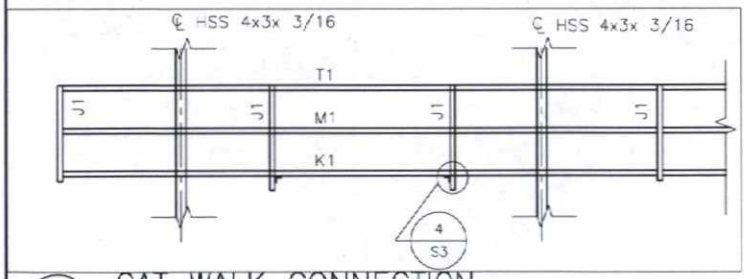

2 / S3 CAT WALK CONNECTION
3/4"

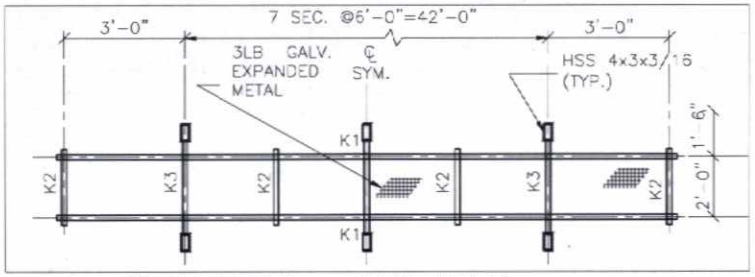

1 / S3 PLAN VIEW – CAT WALK
1-1/2"

GENERAL NOTES

ALL DRAWINGS AND STRUCTURAL INFORMATION ARE THE PROPERTY OF THE ENGINEER.

DO NOT SCALE DRAWINGS

ALL DIMENSIONS AND SITE CONDITIONS TO BE CHECKED AND VERIFIED ON SITE BY THE CONTRACTOR BEFORE COMMENCING ANY WORK. INFORM ENGINEER OF ANY DISCREPANCIES IN WRITING AND OBTAIN WRITTEN APPROVAL FROM THE ENGINEER BEFORE PROCEEDING.

ALL CONSTRUCTION TO BE CARRIED OUT IN ACCORDANCE WITH ALL LOCAL CODES AND AUTHORITIES HAVING JURISDICTION.

No.	DATE	BY	DESCRIPTION
2	SEPT. 12		RE-ISSUED FOR BLDG. PERMIT
1	SEPT. 12		ISSUED FOR BLDG. PERMIT

STAMP

CBS OUTDOOR

CBS OUTDOOR Inc.
377 Horner Avenue
Toronto, Ontario M8W 1Z6

S.P.HART & ASSOCIATES LTD.
120 Carlton St. Suite 412
Toronto, Ontario M5A 4K2
Tel. (416) 413-9700
Fax. (416) 413-1345

PROJECT/LOCATION
14'-0" x 48'-0" LED GROUND FLAG DISPLAY
DOUBLE SIDED
486 EVANS AVENUE
Toronto, Ontario

DRAWING TITLE
NOTES & DETAILS

DRAWN BY	FJV	DWG. No. S3
DATE	AUG /12	OF 6
ENG. No.		
SCALE:	AS NOTED	

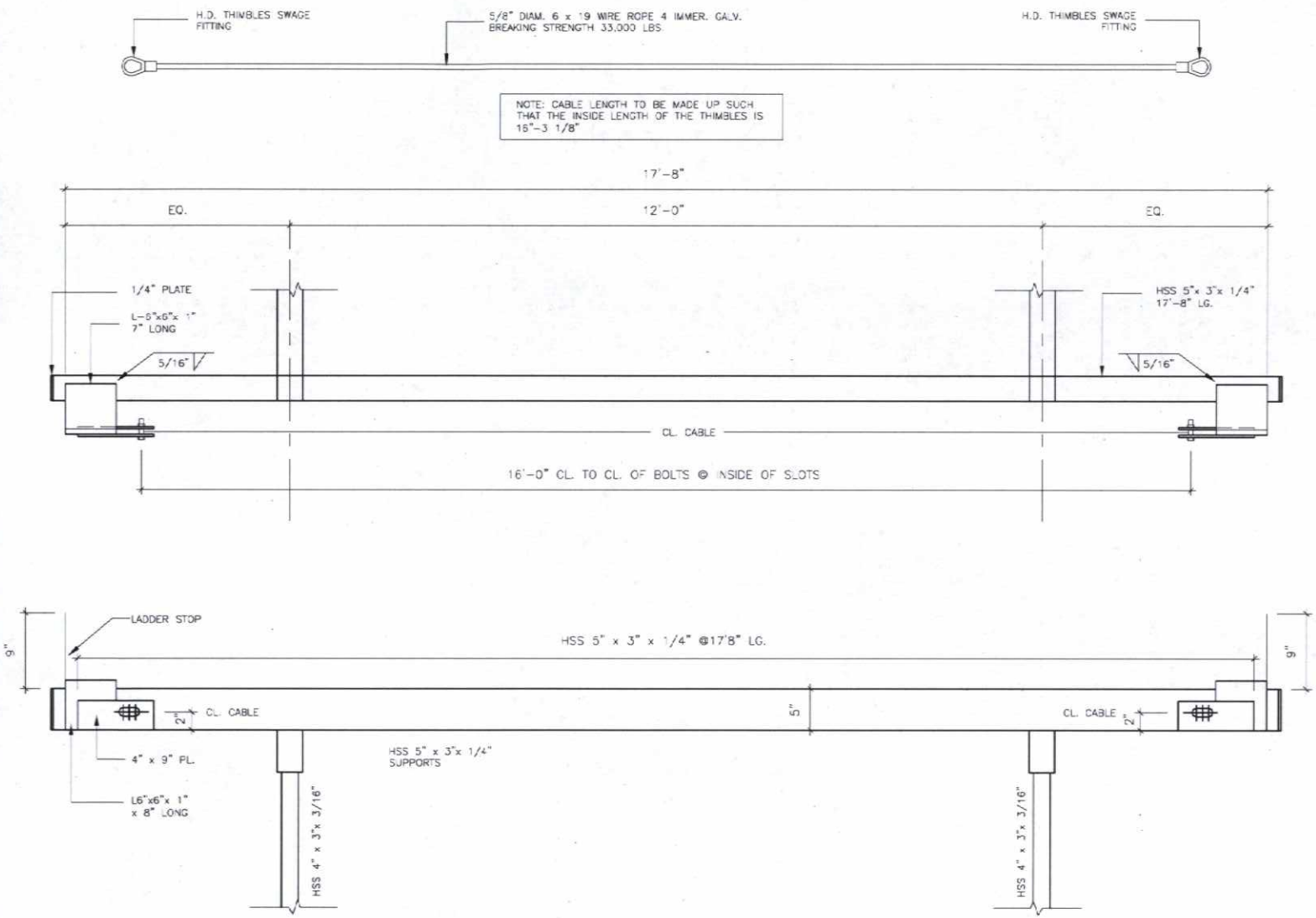

1 S4 FALL ARREST DETAIL

NTS

GENERAL NOTES

ALL DRAWINGS AND STRUCTURAL INFORMATION ARE THE PROPERTY OF THE ENGINEER.

DO NOT SCALE DRAWINGS.

ALL DIMENSIONS AND SITE CONDITIONS TO BE CHECKED AND VERIFIED ON SITE BY THE CONTRACTOR BEFORE COMMENCING ANY WORK. INFORM ENGINEER OF ANY DISCREPANCIES IN WRITING AND OBTAIN WRITTEN APPROVAL FROM THE ENGINEER BEFORE PROCEEDING.

ALL CONSTRUCTION TO BE CARRIED OUT IN ACCORDANCE WITH ALL LOCAL CODES AND AUTHORITIES HAVING JURISDICTION.

No.	DATE	BY	DESCRIPTION
2	SEPT. 12		RE-ISSUED FOR BLDG. PERMIT
1	SEPT. 12		ISSUED FOR BLDG. PERMIT

STAMP

LICENSED PROFESSIONAL ENGINEER
S. P. HART
SEPT. 2012
PROVINCE OF ONTARIO

CBS OUTDOOR

CBS OUTDOOR Inc.
377 Horner Avenue
Toronto, Ontario M8W 1Z6

S.P.HART & ASSOCIATES LTD.
120 Carlton St. Suite 412
Toronto, Ontario M5A 4K2
Tel. (416) 413-9700
Fax. (416) 413-1343

PROJECT/LOCATION
14'-0" x 48'-0" LED GROUND FLAG DISPLAY
DOUBLE SIDED
486 EVANS AVENUE
Toronto, Ontario

DRAWING TITLE
DETAIL

DRAWN BY	FJV	DWG. No. S4
DATE	AUG. /12	OF 6
ENG. No.		
SCALE:	AS NOTED	

(43) 1 1/4" DIA.
ASTM A325
BOLTS

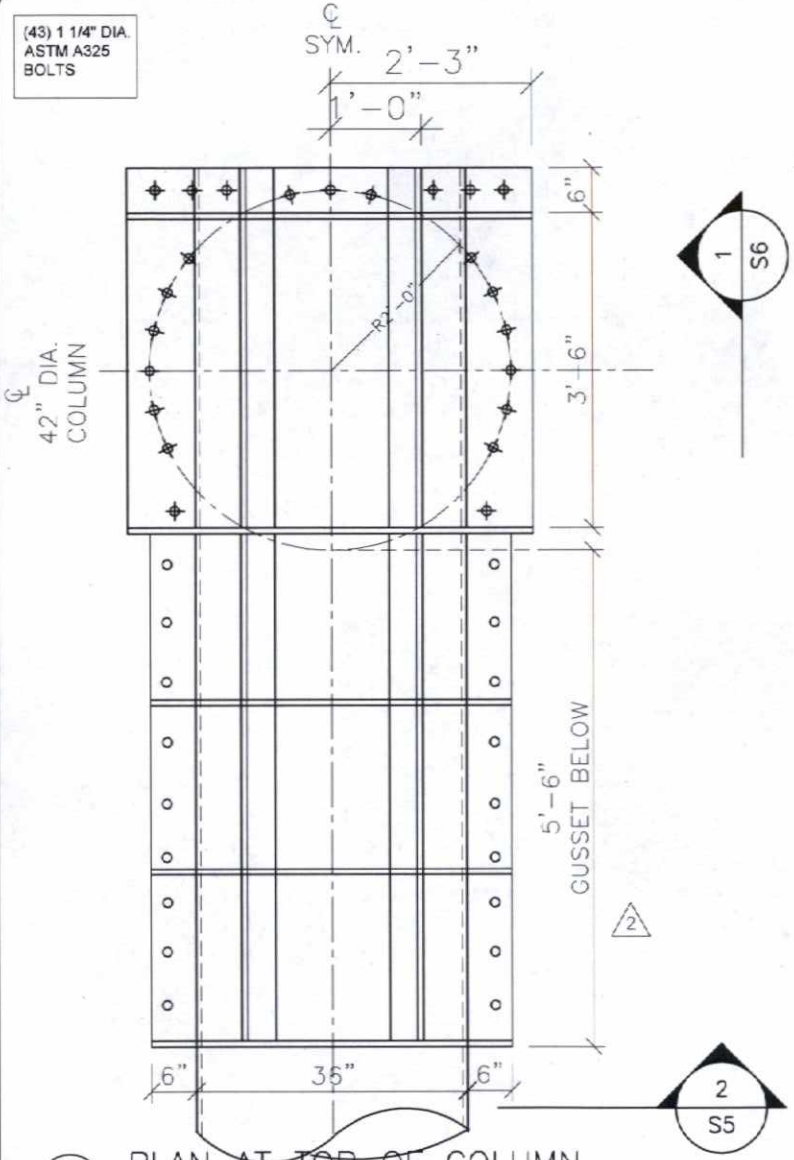

1/S5 PLAN AT TOP OF COLUMN
3/4"=1'-0"

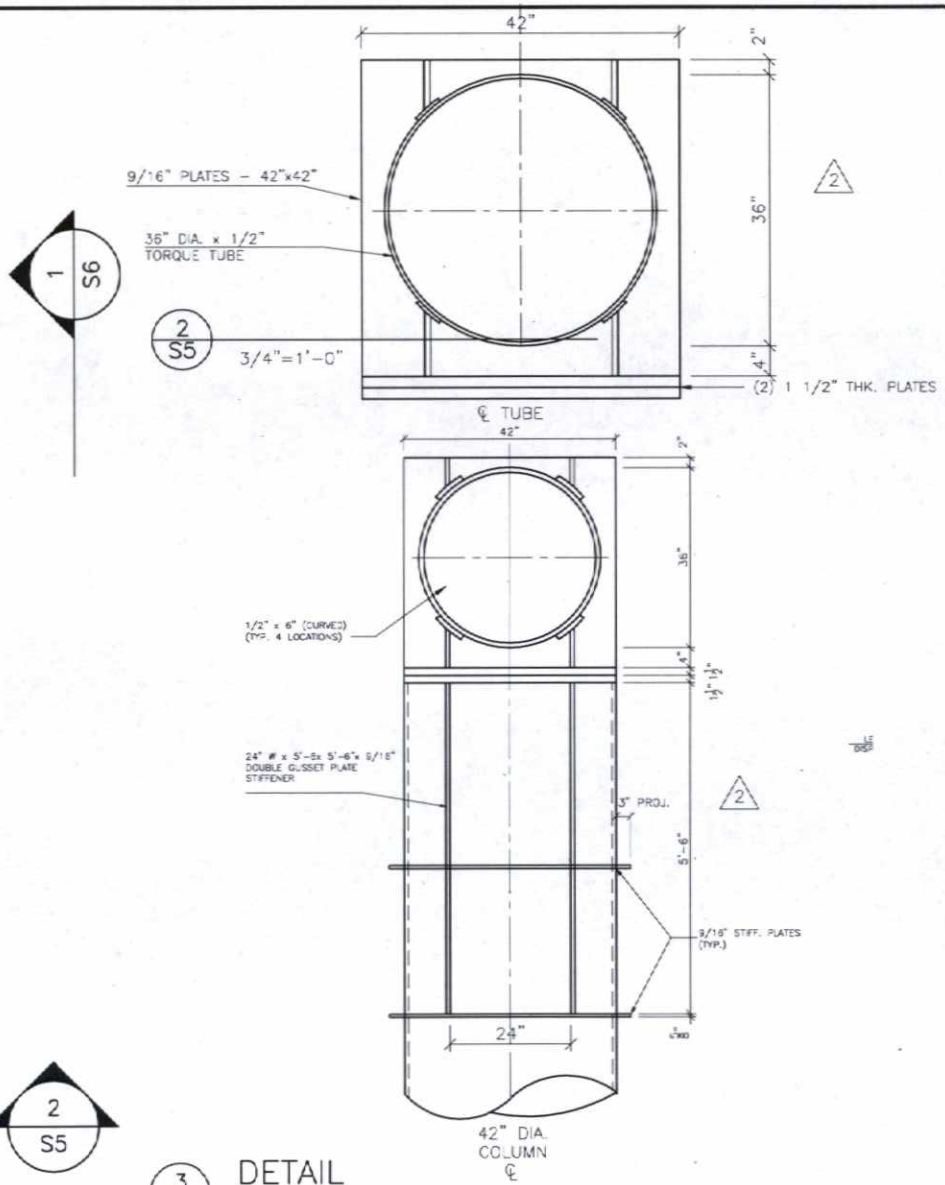

3/S5 DETAIL
1/2"=1'-0"

GENERAL NOTES

ALL DRAWINGS AND STRUCTURAL INFORMATION ARE THE PROPERTY OF THE ENGINEER.

DO NOT SCALE DRAWINGS.

ALL DIMENSIONS AND SITE CONDITIONS TO BE CHECKED AND VERIFIED ON SITE BY THE CONTRACTOR BEFORE COMMENCING ANY WORK. INFORM ENGINEER OF ANY DISCREPANCIES IN WRITING AND OBTAIN WRITTEN APPROVAL FROM THE ENGINEER BEFORE PROCEEDING.

ALL CONSTRUCTION TO BE CARRIED OUT IN ACCORDANCE WITH ALL LOCAL CODES AND AUTHORITIES HAVING JURISDICTION.

No.	DATE	BY	DESCRIPTION
2	SEPT. 12		RE-ISSUED FOR BLDG. PERMIT
1	SEPT. 12		ISSUED FOR BLDG. PERMIT

STAMP

CBS OUTDOOR

CBS OUTDOOR Inc.
377 Horner Avenue
Toronto, Ontario M8W 1Z6

S.P.HART & ASSOCIATES LTD.
120 Carlton St. Suite 412
Toronto, Ontario M5A 4K2
Tel. (416) 413-9700
Fax. (416) 413-1343

PROJECT/LOCATION
14'-0" x 48'-0" LED GROUND FLAG DISPLAY
DOUBLE SIDED
485 EVANS AVENUE
Toronto, Ontario

DRAWING TITLE
DETAIL

DRAWN BY	FJV	DWG. No. S5
DATE	AUG. /12	OF 6
ENG. No.		
SCALE:	AS NOTED	

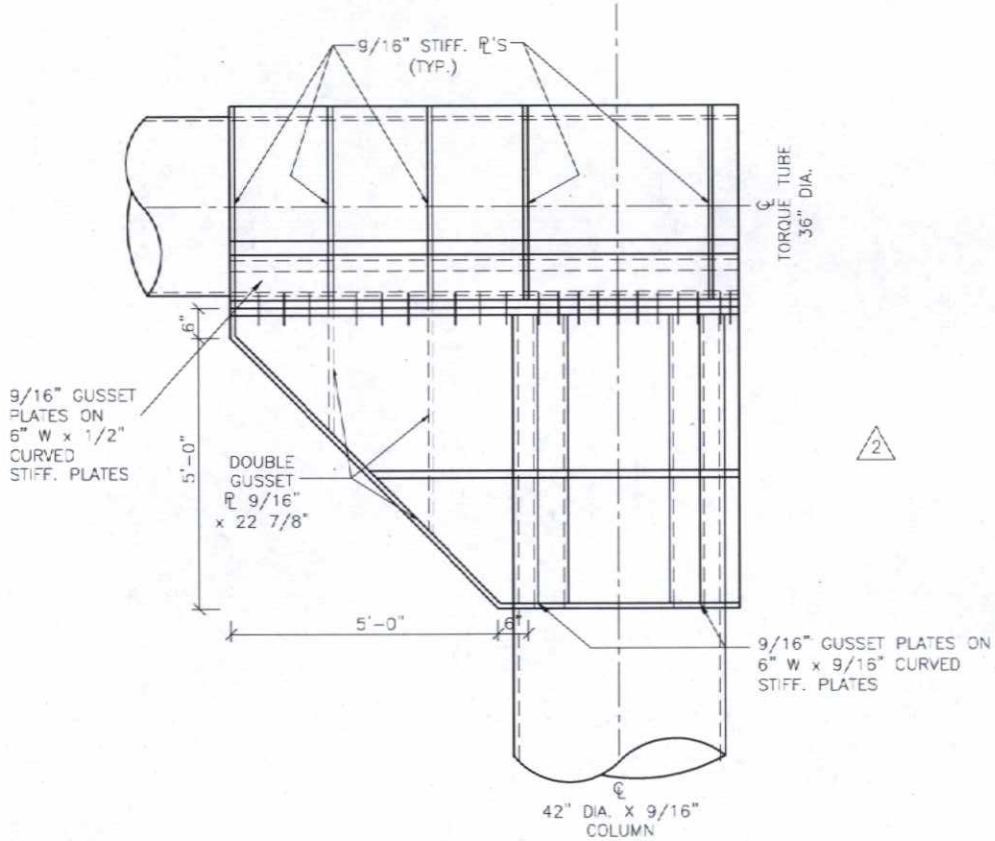

1
S6

DETAIL AT COL. STIFFENER

1/2"=1'-0"

GENERAL NOTES

ALL DRAWINGS AND STRUCTURAL INFORMATION ARE THE PROPERTY OF THE ENGINEER.

DO NOT SCALE DRAWINGS.

ALL DIMENSIONS AND SITE CONDITIONS TO BE CHECKED AND VERIFIED ON SITE BY THE CONTRACTOR BEFORE COMMENCING ANY WORK. INFORM ENGINEER OF ANY DISCREPANCIES IN WRITING AND OBTAIN WRITTEN APPROVAL FROM THE ENGINEER BEFORE PROCEEDING.

ALL CONSTRUCTION TO BE CARRIED OUT IN ACCORDANCE WITH ALL LOCAL CODES AND AUTHORITIES HAVING JURISDICTION.

No.	DATE	BY	DESCRIPTION
2	SEPT. 12		RE-ISSUED FOR BLDG. PERMIT
1	SEPT. 12		ISSUED FOR BLDG. PERMIT

STAMP

CBS OUTDOOR

CBS OUTDOOR Inc.
377 Horner Avenue
Toronto, Ontario M8W 1Z6

S.P.HART & ASSOCIATES LTD.
120 Carlton St. Suite 412
Toronto, Ontario M5A 4K2
Tel. (416) 413-9700
Fax. (416) 413-1343

PROJECT/LOCATION
14'-0" x 48'-0" LED GROUND FLAG DISPLAY
DOUBLE SIDED
485 EVANS AVENUE
Toronto, Ontario

DRAWING TITLE
DETAIL

DRAWN BY	FJV	DWG. No
DATE	AUG. /12	S6
ENG. No.		OF 6
SCALE:	AS NOTED	

486 Evans Ave ,Toronto
Remove existing
CBS Double Face 10'x20'
Third Party Roof Sign
Construct One Double
Face Ground sign to
contain "electronic static
copy' 14'x48'
POWER

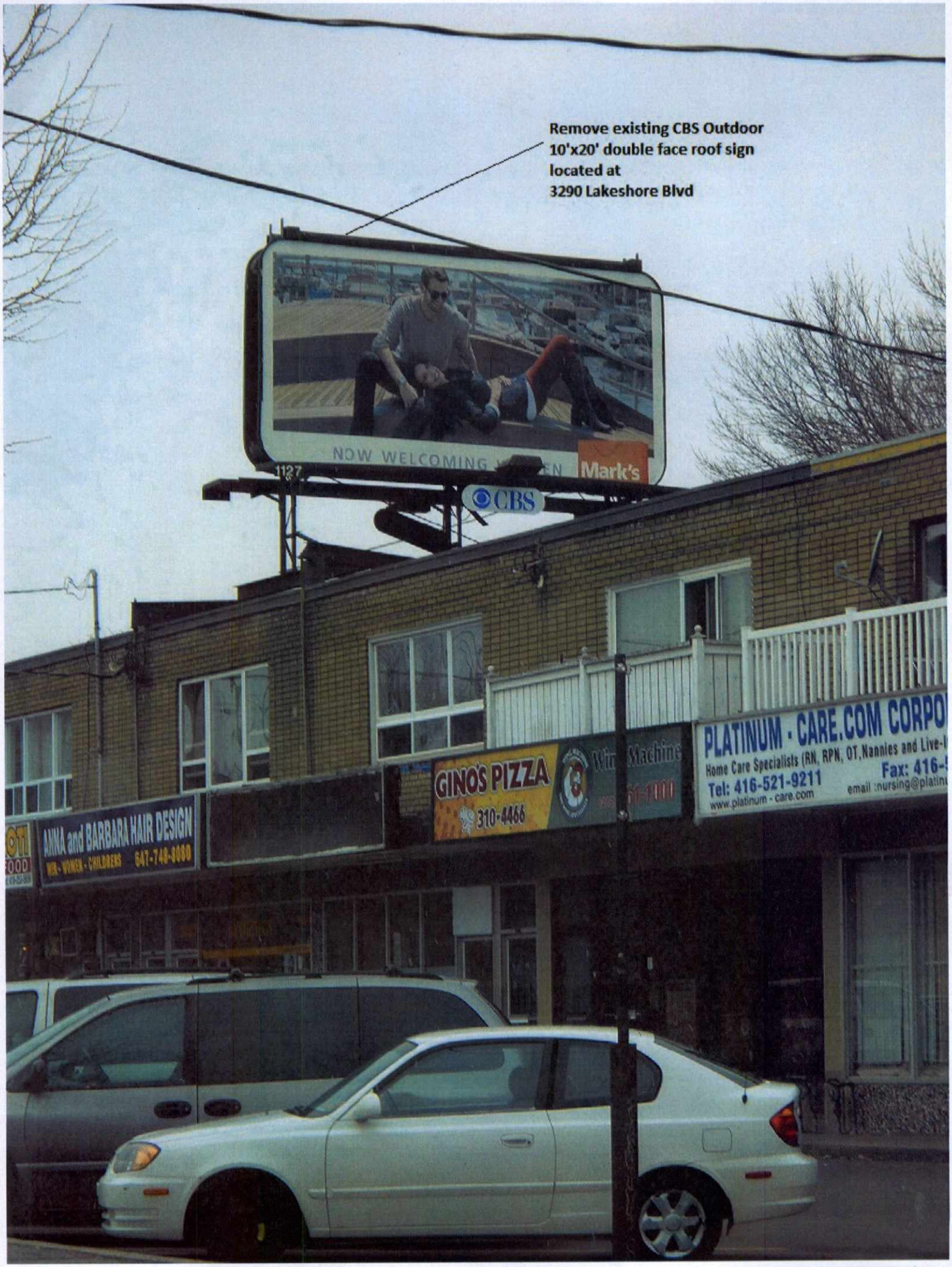
Remove existing CBS Outdoor
10'x20' double face roof sign
located at
3290 Lakeshore Blvd
NOW WELCOMING
Mark's
1127
CBS
GINO'S PIZZA
310-4466
ANNA and BARBARA HAIR DESIGN
MEN - WOMEN - CHILDREN
647-748-8080
PLATINUM - CARE.COM CORPO
Home Care Specialists (RN, RPN, OT, Nannies and Live-
Tel: 416-521-9211
www.platinum - care.com
Fax: 416-
email :nursing@platin

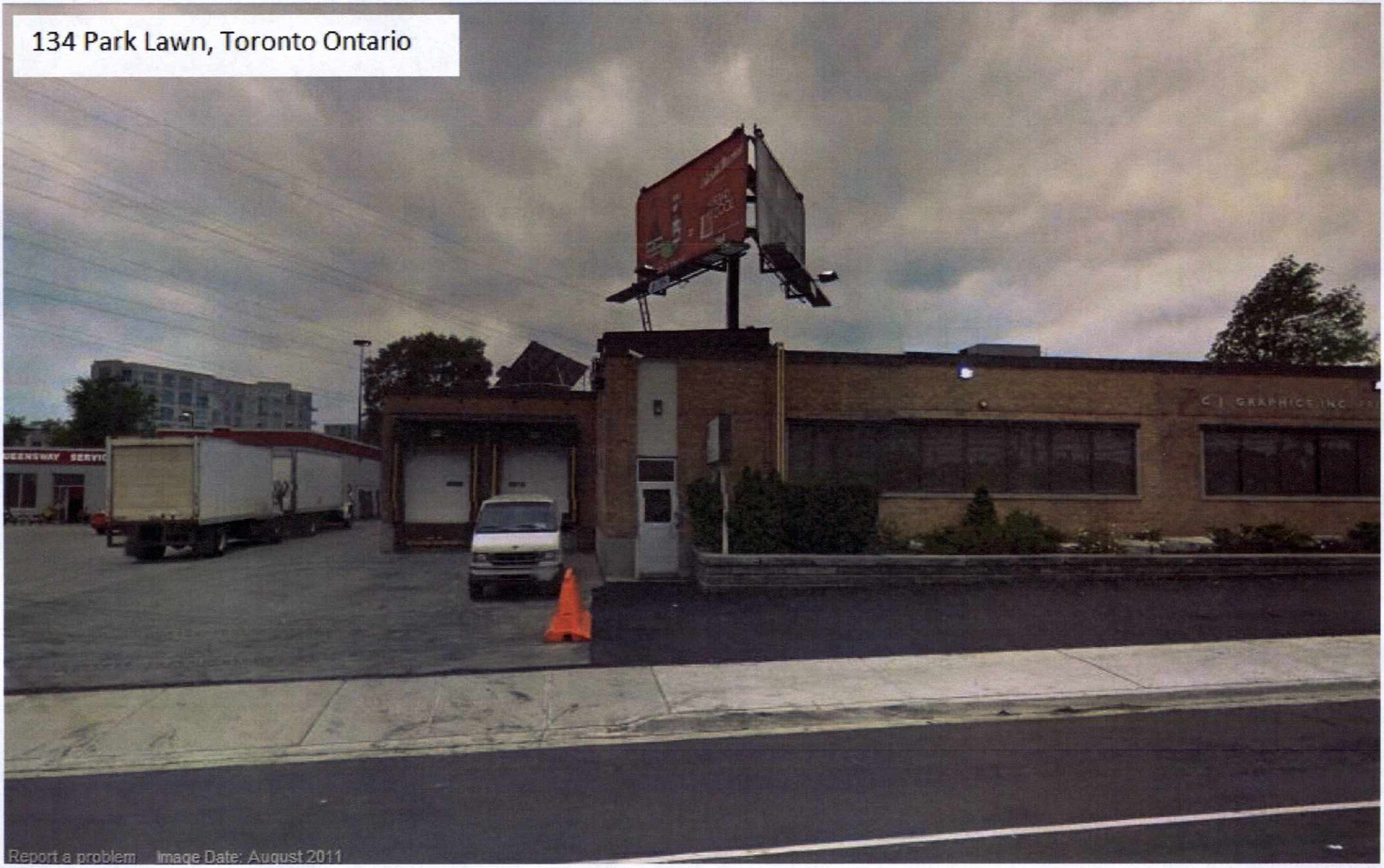
134 Park Lawn, Toronto Ontario
Report a problem
Image Date: August 2011

Remove Exsisting 10'x44' CBS
Outdoor ,Legal Non Conforming
Roof Sign located at
273 College Street Toronto
Inspire.
Connect.
Create.

486 EVANS AVENUE

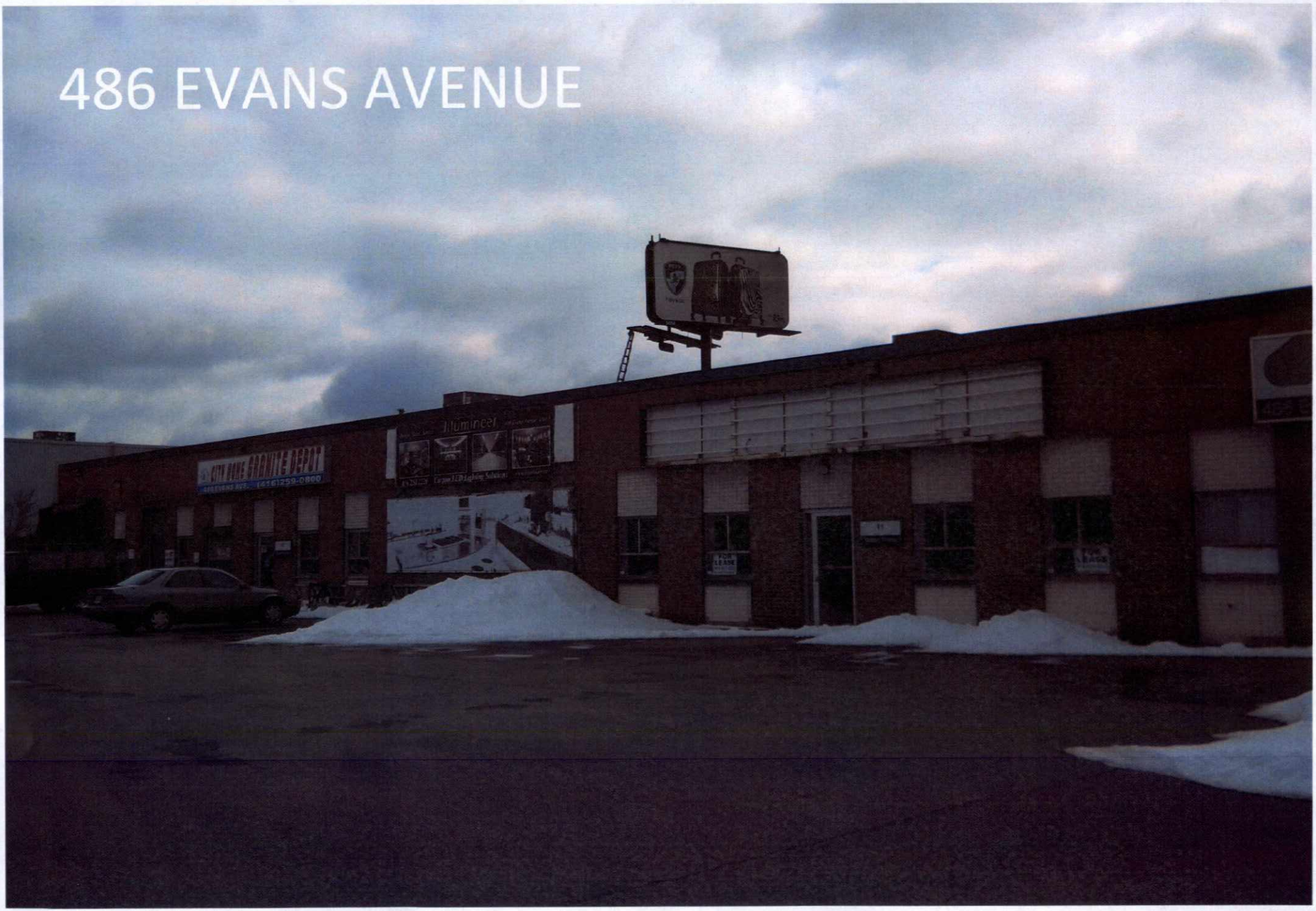

Ted Van Vliet - Re: taking a shot at the outcome of yesterdays discussion in relation to the 20 years and 24 hours opening position and a policy angle

From: Tony Genco <tgenco@northcliffegroup.com>
To: Ted Van Vliet <tvanvli@toronto.ca>
Date: 3/21/2013 12:58 PM
Subject: Re: taking a shot at the outcome of yesterdays discussion in relation to the 20 years and 24 hours opening position and a policy angle
CC: "Dzeko, Roy" <rdzeko@cbsoutdoor.ca>, "McGregor, Stephen" <smcgregor@cbsoutdoor.ca>, <gcrompt@toronto.ca>

Dear Mr. Van Vliet;

Thank you for taking the time to meet with Northcliffe Groups clients the CBS Group along with one of your colleagues to discuss the status and circumstances around the 486 Evans application and having a hearing before Planning and Growth Committee of Council in May. We appreciated your honest and frank exchange around process and as agreed to at the meeting have undertaken to arrange the transportation meeting that you will be present at to continue the substantive exchange with the goal of finding an acceptable way ahead.

With regards, to the process issue, no doubt that you are aware that we on behalf of CBS Outdoor have also advanced that dialogue and we hope subsequent to that meeting you will feel more empowered not to simply provide a report that seeks a defer which is clearly not what the committee wants if it is asking for a report from staff but a strong supportive recommendation given all of the policy considerations that we have clearly complied with in lieu of what is a reasonable concession in exchange.

On another matter of substance for your consideration as you continue to write (we hope) a positive staff report, we have reflected on our conversation further in relation to the two substantive policy issues you raised concerns with us on -namely the length of the permit (proposed by us as 20 years) and 24 hour lighting. Based on the concerns that you raised, we are ready to ask for a 10 year permit given that we are absolutely certain that the community context will not change within that framework and therefore having a sign in that vicinity will not be a hindrance to urban planning and growth issues in the neigbourhood as is a policy factor in relation to the current standard of 5 years.

As well, given the location of the sign and our desire for it to be allowed for 24 hours, we are comfortable with the idea that after 5 years the matter can be reviewed by the City and if the circumstances in the neighbourhood change during that time period that we can revert to the time frame contemplated in the current by law namely 11pm.

The rest of our rationale stands. I can not reemphasize enough that the 4 signs that CBS outdoor is taking down for which we have perpetual rights that will disappear following the take down are a significant contribution to the City's policy desires around roof top signage in exchange for our requests for a by law amendment. We seek to only cooperate and collaborate with the City thought this application and subsequent applications that we will be bringing to the Planning and Growth Committee and it is only through dialogues like the one we had yesterday that we can produce an open and transparent environment where we can find a way to work together to achieve our mutual operational objectives.

We look forward to continuing that process with any other questions you may have and trust that now you can support our application when the matter will be dealt with by the Committee in May

All the best

--
Tony Genco
Associate
Northcliffe Group
6479649323

--
Tony Genco
Associate
Northcliffe Group
6479649323

Ted Van Vliet - Fwd: 486 Evans Avenue

From: Tony Genco <tgenco@northcliffegroup.com>
To: Ted Van Vliet <tvanvli@toronto.ca>, John Heggie <jheggie@toronto.ca>
Date: 4/3/2013 10:57 AM
Subject: Fwd: 486 Evans Avenue
CC: Ann Borooah <aborooa@toronto.ca>, Anthony Cesario <acesario@northcliffegroup.com>

Further to yesterdays dialogue in the context of moving forward, we propose the following modification to our proposal in order to come closer to the expectations of Ms Borooah with regard to the sign bylaw amendment we propose for 486 Evans Avenue.

We are withdrawing the removal of 134 ParkLawn and replacing it with 64 Fordhouse

64 Fordhouse is a back to back roof sign, more or less directly across from 486 Evans, which faces the Gardiner traffic flow. By adding this to the application by offering to remove this in lieu of 134 Parklawn, we would be satisfying (as best we can) that the removal has some direct relationship to the relief sought. By removing it, we would be removing the two roof signs which are in greatest proximity to 486 Evans Avenue and is something we need to do now given our contracting circumstances as I understand them reinforcing the timing for the May cycle.

Please amend the application accordingly. With this last change following yesterdays consultation with Senior Staff our proposal is locked down. We hope that you will look at this in the overall and determine that a positive staff recommendation for the May meeting is appropriate.

Wishing you all the best.

--
Tony Genco
Associate
Northcliffe Group
6479649323