ATTACHMENT 1 - Site Plan of Sidewalk Cafe

CAFE X BICA - Frontage Cafés (81.7 Sq-m)

Sheet List	
Sheet Name	Sheet Number
COVER PAGE	FC-00
EXISTING SITE PLAN	FC-01
PROPOSED SITE PLAN	FC-02
FENCE & Visual Screen	FC-03

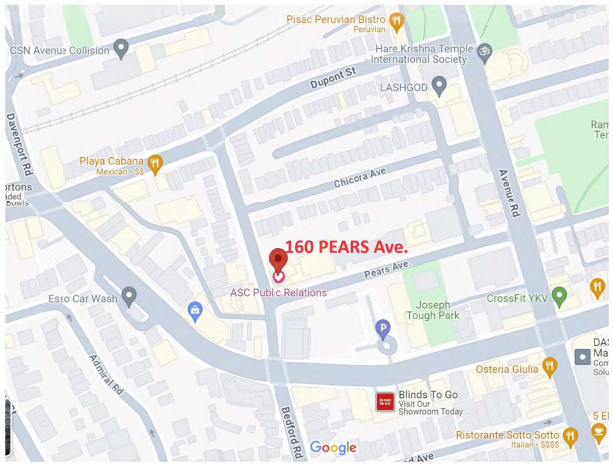

KEY PLAN

1102-4711 Yonge St.
Toronto, M2M 5M4

Tel: (416) 901 - 5001
Fax: (416) 901 - 5002

info@elviano.com

www.elviano.com

LICENSED PROFESSIONAL ENGINEER
A. KHODABANDEH
100202786
PROVINCE OF ONTARIO

The contractor must check and verify all dimensions of the job and be responsible for same reporting any discrepancies to the architect before commencing work. Drawings must not be scaled.

The undersigned has reviewed and takes responsibility for this design and has the qualification and meets the requirement set out in the Ontario Building Code to be a designer. Qualification and registration information required unless design exempt under 3.2.4.1 of the OBC.

QUALIFICATION INFORMATION

Name	Signature	BCIN
Arman Khodabandeh		111185

REGISTRATION INFORMATION

Firm Name	BCIN
Elviano Construction Ltd.	119835

Firm:
ELVIANO & ATRIANI

Revisions

No.	Date	Description

Project:
CAFE X BICA
Frontage Cafés
160 PEARS AVE

Sheet Title:
COVER PAGE

Sheet No:
FC-00

Date: 2024-03-14
Scale:

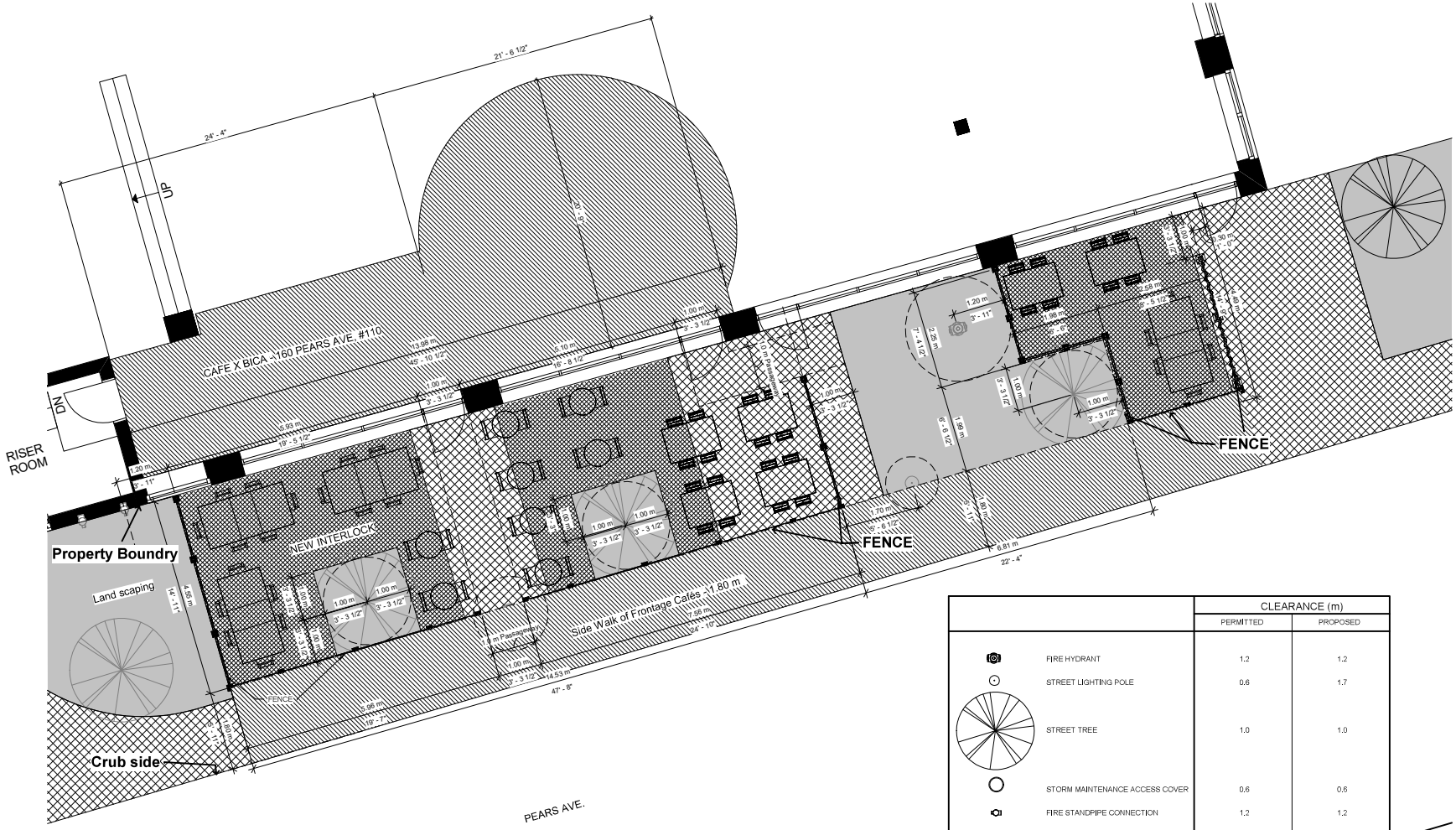

	CLEARANCE (m)	
	PERMITTED	PROPOSED
FIRE HYDRANT	1.2	1.2
STREET LIGHTING POLE	0.6	1.7
STREET TREE	1.0	1.0
STORM MAINTENANCE ACCESS COVER	0.6	0.6
FIRE STANDPIPE CONNECTION	1.2	1.2
PEDESTRIAN CLEARWAY ON LOCAL ROAD (PEARS AVE.)	1.8	1.8
NEW INTERLOCK	572 Sq - ft	
FENCE	110 ft	

ELVIANO

1102-4711 Yonge St.
Toronto, M2M 5M4

Tel: (416) 901 - 5001
Fax: (416) 901 - 5002

info@elviano.com

www.elviano.com

LICENSED PROFESSIONAL ENGINEER
A. KHODABANDEH
100202786
PROVINCE OF ONTARIO

The contractor must check and verify all dimensions of the job and be responsible for same reporting any discrepancies to the architect before commencing work. Drawings must not be scaled.

The undersigned has reviewed and takes responsibility for this design and has the qualification and meets the requirement set out in the Ontario Building Code to be a designer. Qualification and registration information required unless design exempt under 3.2.4.1 of the OBC.

QUALIFICATION INFORMATION

Name	Signature	BCIN
Armaz Khodabandeh		111185

REGISTRATION INFORMATION

Firm Name	BCIN
Elviano Construction Ltd.	119835

Firm:

ELVIANO & ATRIANI

Revisions

No.	Date	Description
1	24-03-22	Add More Labels

Project:

CAFE X BICA
Frontage Cafés
160 PEARS AVE

Sheet Title:

PROPOSED SITE PLAN

Sheet No:

Date: 2024-03-14

Scale: As indicated

FC-02

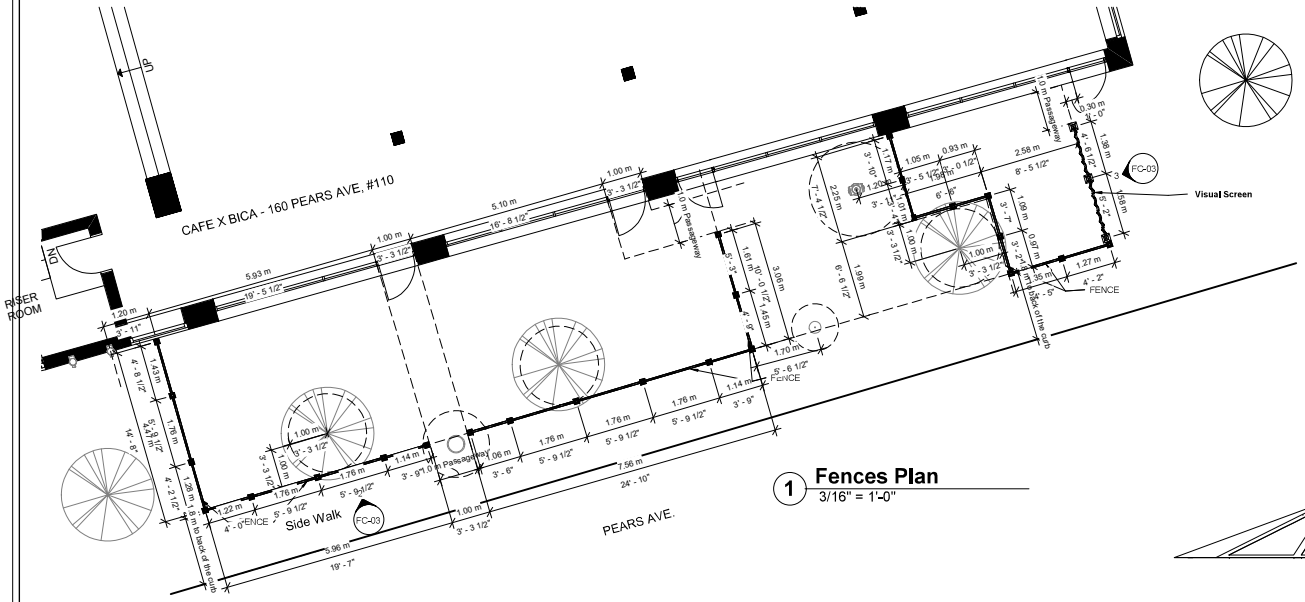

1 **Fences Plan**
3/16" = 1'-0"

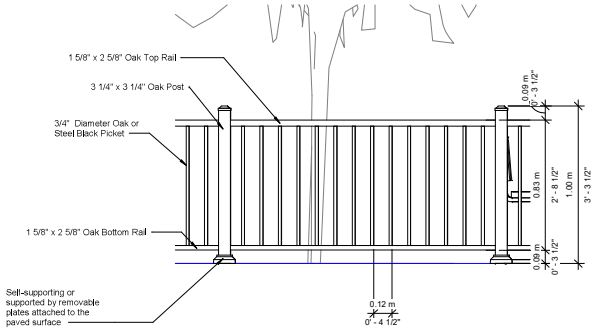

2 **Elevation 1 - a - Typ. Fences**
3/4" = 1'-0"

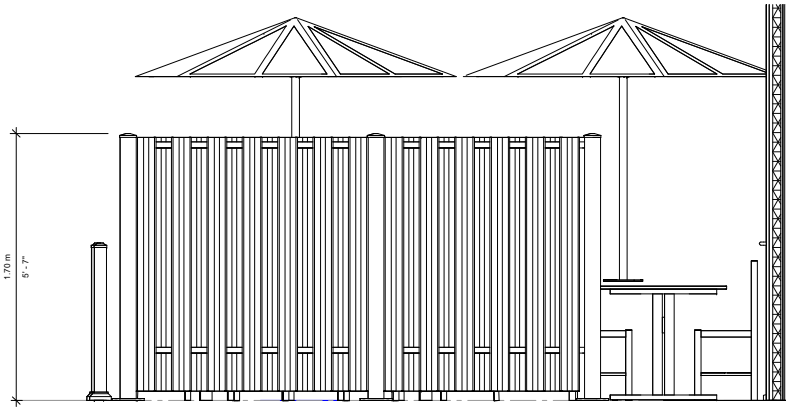

3 **Elevation 1 - d - Visual Screen**
3/4" = 1'-0"

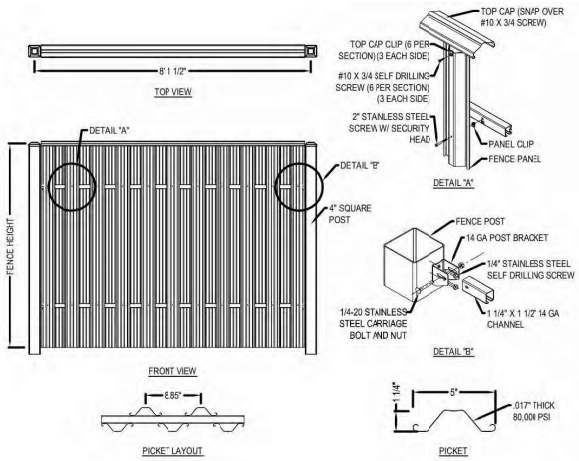

ELVIANO

1102-4711 Yonge St.
Toronto, M2M 5M4

Tel: (416) 901 - 5001
Fax: (416) 901 - 5002

info@elviano.com

www.elviano.com

LICENSED PROFESSIONAL ENGINEER
A. KHODABANDEH
100202786
PROVINCE OF ONTARIO

The contractor must check and verify all dimensions of the job and be responsible for same reporting any discrepancies to the architect before commencing work. Drawings must not be scaled.

The undersigned has reviewed and takes responsibility for this design and has the qualification and meets the requirement set out in the Ontario Building Code to be a designer. Qualification and registration information required unless design exempt under 3.2.4.1 of the OBC.

QUALIFICATION INFORMATION

Name	Signature	BCIN
Armaz Khodabandeh		111185

REGISTRATION INFORMATION

Firm Name	BCIN
Elviano Construction Ltd.	119835

Firm:
ELVIANO & ATRIANI

Revisions

No.	Date	Description

Project:
CAFE X BICA
Frontage Cafés
160 PEARS AVE

Sheet Title:
FENCE & Visual Screen

Sheet No:
FC-03

Date: 2024-03-14
Scale: As indicated