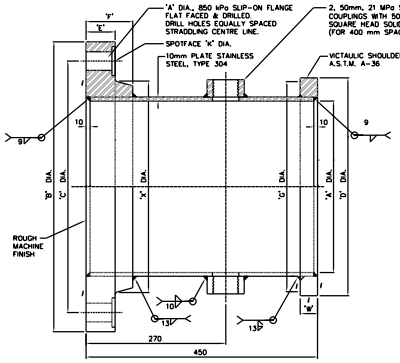

NOTES

1. FLANGE TO BE FORGED STEEL CONFORMING TO A.S.T.M. SPEC. A181, GRADE 1, FLAT FACED SLIP ON FLANGE. DIA. OF BORE TO SUIT O.D. OF PIPE.
2. USE E-309 ELECTRODES WHEN WELDING TYPE 304 STAINLESS STEEL TO MILD STEEL.
3. MACHINE FACES MARKED /
4. SLIP ON FLANGE TO BE TACK WELDED IN SHOP. ADJUST AS REQUIRED IN FIELD & COMPLETE WELDING.

SUPPLIED BY CONTRACTOR

MARK	NOMINAL PIPE DIA.	No. REQ'D	'A' DIA.	'X' DIA.	'B' DIA.	'C' DIA.	'D' DIA.	'E' DIM.	'F' DIM.	'W' DIM.	MACHINE TO 'G' DIA.	SPOT-FACE 'K' DIA.	BOLT HOLES	
													SIZE	No.REQ'D
C40	400		407	458	597	540	470	37	64	30	458	50	29	16
C40	600		610	664	813	749	689	48	83	30	675	62	35	20
C40	750		762	832	984	915	857	54	89	45	838	62	35	28
C40	900		915	997	1169	1086	1021	60	95	45	1001	75	42	32
C40	1050		1067	1169	1346	1257	1184	67	102	45	1163	75	42	36
C40	1200		1219	1327	1511	1422	1349	70	105	45	1326	75	42	44
C40	1350		1372	1492	1683	1594	1516	76	110	45	1496	86	50	44

C40 – FABRICATED S.S. FLANGE TO VICTAULIC SPACER

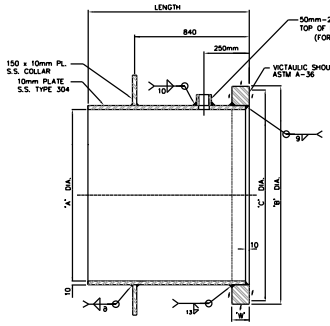

NOTES

1. USE E-309 ELECTRODES WHEN WELDING TYPE 304 STAINLESS STEEL TO MILD STEEL.
2. USE E-308-16 ELECTRODES WHEN WELDING TYPE 304 STAINLESS STEEL TO TYPE 304 STAINLESS STEEL.
3. MACHINE FACES MARKED /
4. HYDROSTATIC TEST TO 1200 kPa

SUPPLIED BY CONTRACTOR

MARK	NOMINAL PIPE DIA.	No. REQ'D	LENGTH	'A' DIA.	'B' DIA.	MACHINE TO 'C' DIA.	'W' DIM.
C43	600			610	689	675	30
C43	750			762	857	838	45
C43	900			915	1021	1001	45
C43	900			915	1021	1001	45
C43	1050			1067	1184	1163	45
C43	1200			1219	1349	1326	45
C43	1350			1372	1516	1496	45

C43 – FABRICATED S.S. VICTAULIC TO PLAIN END SPACER

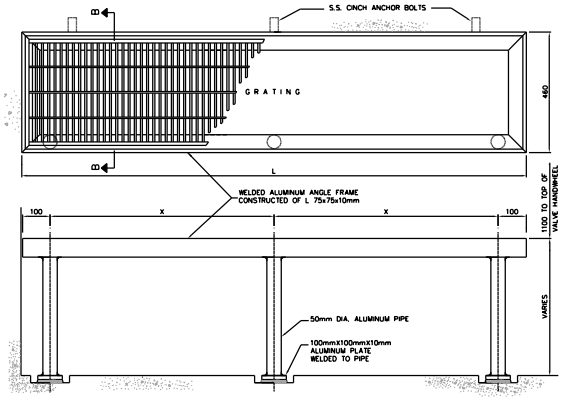

GRATING DETAILS

NOTES

1. GRATING SHALL BE: IRVING SUBWAY GRATING, ALUMINUM, TYPE C-C BEARING BARS-45mmx5mm @ 20mm CTS. CROSS BARS-25mmx5mm @ 100mm CTS. OR EQUIVALENT.
2. GRATING SHALL BE INSTALLED INTO FRAME IN TWO SECTIONS.

CHAMBER No.	DIM. 'L'	DIM. 'X'
	1900	850
	1900	850

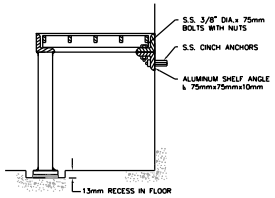

SECTION B-B

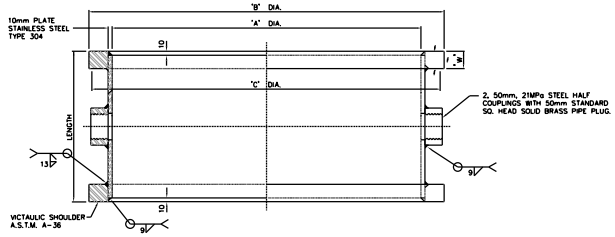

NOTES

1. USE E-309 ELECTRODES WHEN WELDING TYPE 304 STAINLESS STEEL TO MILD STEEL.
2. HYDROSTATIC TEST TO 1200 kPa
3. MACHINE FACES MARKED /

SUPPLIED BY CONTRACTOR

MARK	NOMINAL PIPE DIA.	No. REQ'D	LENGTH	'A' DIA.	'B' DIA.	MACHINE TO 'C' DIA.	'W' DIM.
C41	600		457	610	689	675	30
C41	750		305	762	857	838	45
C41	900		305	915	1021	1001	45
C41	1050		305	1067	1184	1163	45
C41	1200		305	1219	1349	1326	45
C41	1350		305	1372	1516	1496	45

C41 – FABRICATED S.S. VICTAULIC SPACER

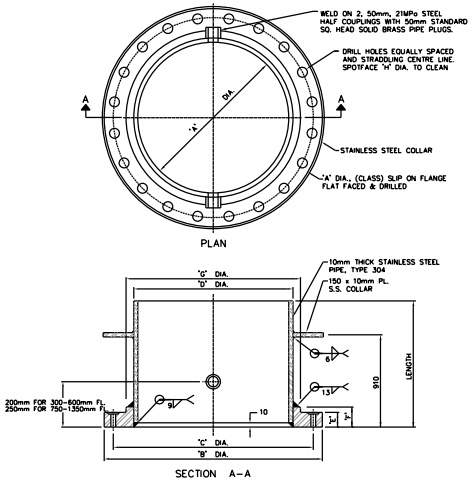

NOTES

1. USE E-309 ELECTRODES WHEN WELDING TYPE 304 STAINLESS STEEL TO MILD STEEL.
2. USE E-308-16 ELECTRODES WHEN WELDING TYPE 304 STAINLESS STEEL TO TYPE 304 STAINLESS STEEL.
3. FLANGE TO BE FORGED STEEL CONFORMING TO A.S.T.M. SPCECIFICATION A181 GRADE 1, FLAT FACED, SLIP ON FLANGE. DIA. OF BORE TO SUIT O.D. OF PIPE.
4. FLANGES ARE TO RECEIVE A ROUGH MACHINE FINISH ON FLAT FACE.

SUPPLIED BY CONTRACTOR

CLASS	MARK	NOMINAL PIPE DIA.	No. REQ'D.	LENGTH	'A' DIA.	'B' DIA.	'C' DIA.	'D' DIA.	'G' DIA.	'E' DIM.	'F' DIM.	'H' DIA.	BOLT HOLES	
													SIZE	No. REQ'D.
1050 kPa	C45	300			305	483	432	325	365	32	56	45	26	12
	C45	400			406	597	540	426	457	37	64	50	29	16
	C45	500			508	699	635	528	559	43	73	60	32	20
	C45	600			610	813	749	630	664	48	83	65	35	20
850 kPa	C45	750			762	985	915	782	832	54	89	65	35	28
	C45	900			915	1168	1086	935	997	61	95	75	42	32
	C45	900			915	1168	1086	935	997	61	95	75	42	32
	C45	1050			1067	1346	1257	1087	1169	67	102	75	42	36
	C45	1200			1219	1511	1422	1239	1327	70	105	75	42	44
	C45	1350			1372	1683	1594	1392	1492	76	110	85	50	44

C45 – FABRICATED S.S. FLANGE TO PLAIN END SPACER

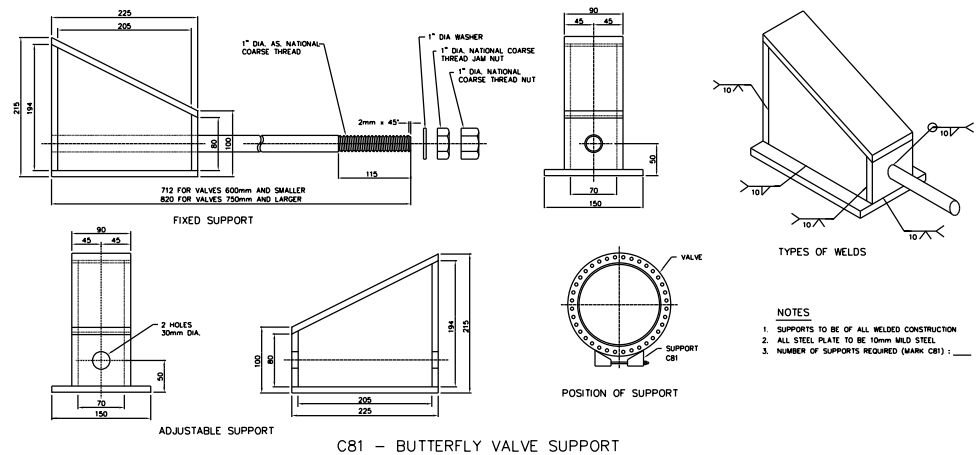

NOTES

1. SUPPORTS TO BE OF ALL WELDED CONSTRUCTION
2. ALL STEEL PLATE TO BE 10mm MILD STEEL
3. NUMBER OF SUPPORTS REQUIRED (MARK C81) : ____

C81 – BUTTERFLY VALVE SUPPORT

TORONTO Water

No.	DATE	REVISIONS	INITIAL	SIGNED

TORONTO Engineering & Construction Services

GENERAL MANAGER, TORONTO WATER

DIRECTOR, Design and Construction Linear Underground Infrastructure

EXECUTIVE DIRECTOR, Engineering & Construction Services

MANAGER, Design and Construction Linear Underground Infrastructure

Title
Subtitle1
Subtitle2

MISCELLANEOUS APPURTENANCES-CAST IN PLACE CHAMBERS

DESIGN	Design	DRAWN	Drawn	CHECKED	Checked	CONTRACT No. X-X	
SCALE	SCALE			DRAWING NUMBER	T-1110.07-2		SHEET X OF X
DATE	DATE						