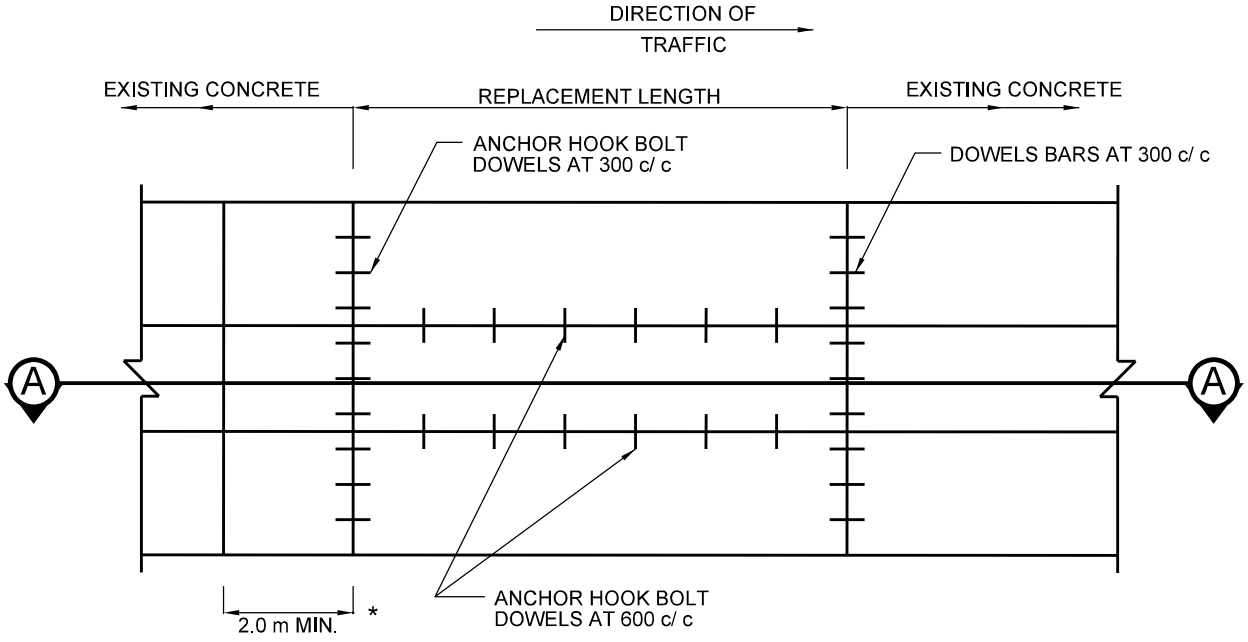


## PLAN

* IF PROXIMITY OF FULL DEPTH REPAIR TO EXISTING JOINT OR CRACK IS 2.0 m OR LESS, EXTEND CONCRETE REPLACEMENT TO 300 mm BEYOND JOINT OR CRACK.

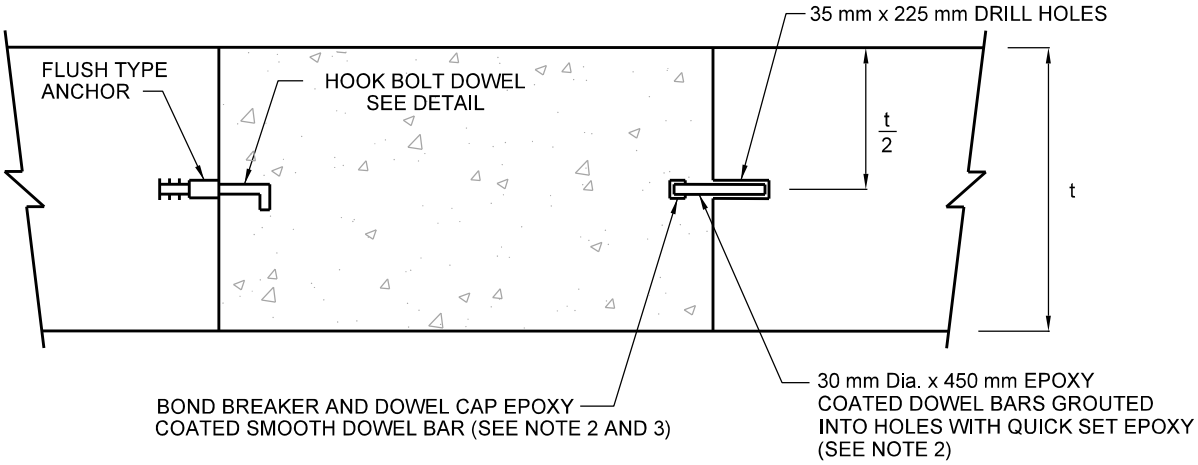


## SECTION A - A

NOTES:

1. JOINT SPACING TO MATCH EXISTING.
2. THE GROUT SHALL ENVELOP THE BAR WITHIN THE DRILL HOLE. THE GROUT SHALL BE FULLY SET PRIOR TO POURING THE NEW CONCRETE.
3. THE FREE END OF THE DOWEL BARS SHALL RECEIVE A THIN AND UNIFORM COATING OF GREASE (BOND BREAKER) AND A DOWEL CAP IMMEDIATELY PRIOR TO POURING NEW CONCRETE.
4. t = CONCRETE BASE DEPTH.

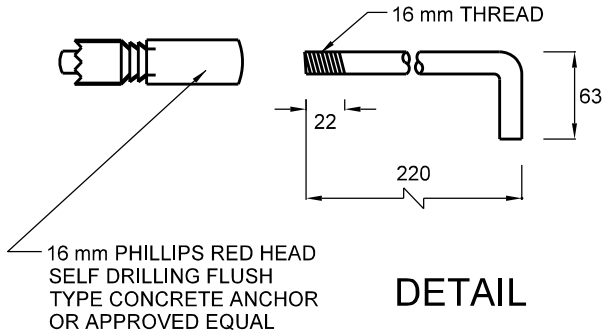


## DETAIL

All dimensions are in millimetres unless otherwise shown.

| | | | |
|---|---|---|---|
| TORONTO | ENGINEERING & CONSTRUCTION SERVICES STANDARD DRAWING | REV 1 | NOV 2014 |
| | **ANCHORED HOOK BOLT DOWEL AND CONCRETE REPAIR DETAIL** | **T-508.010-1** | |
| | | NTS | SHEET 1 |