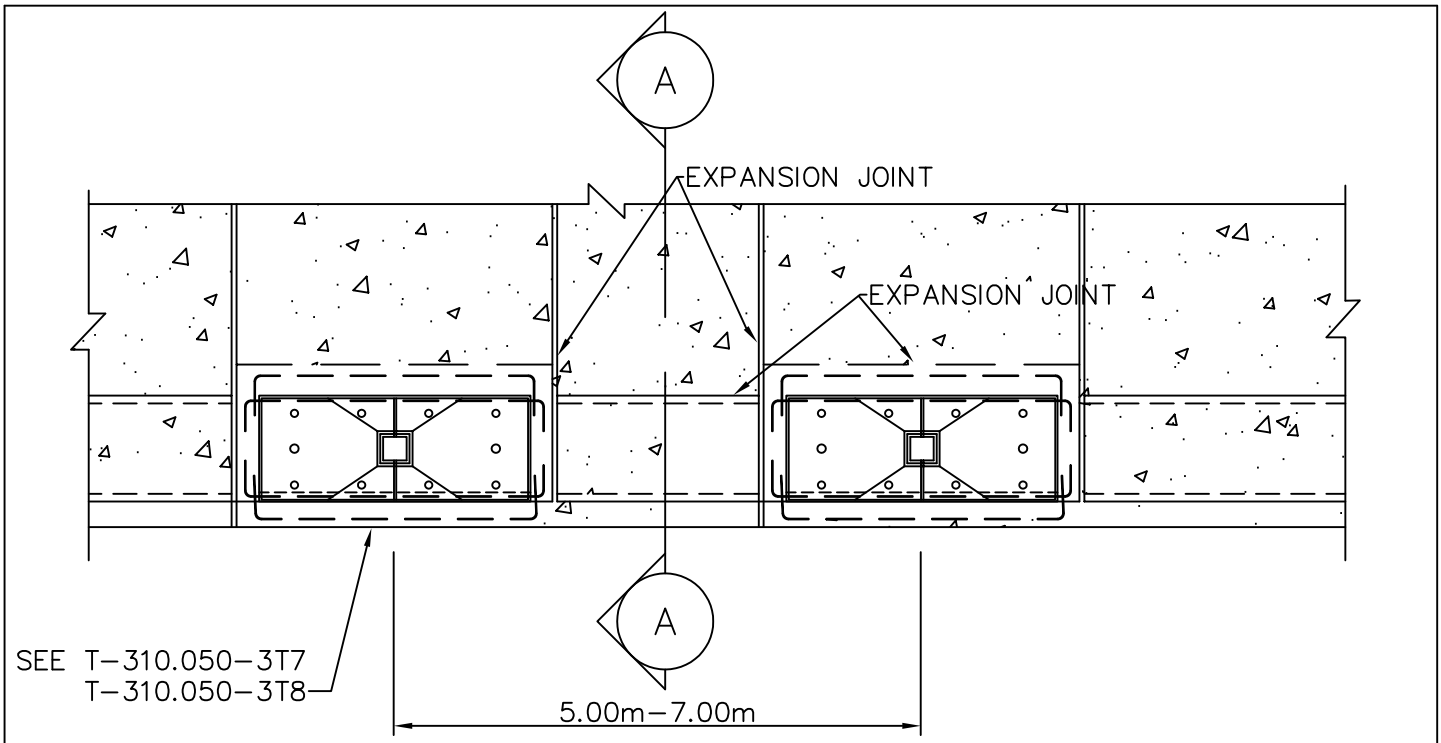

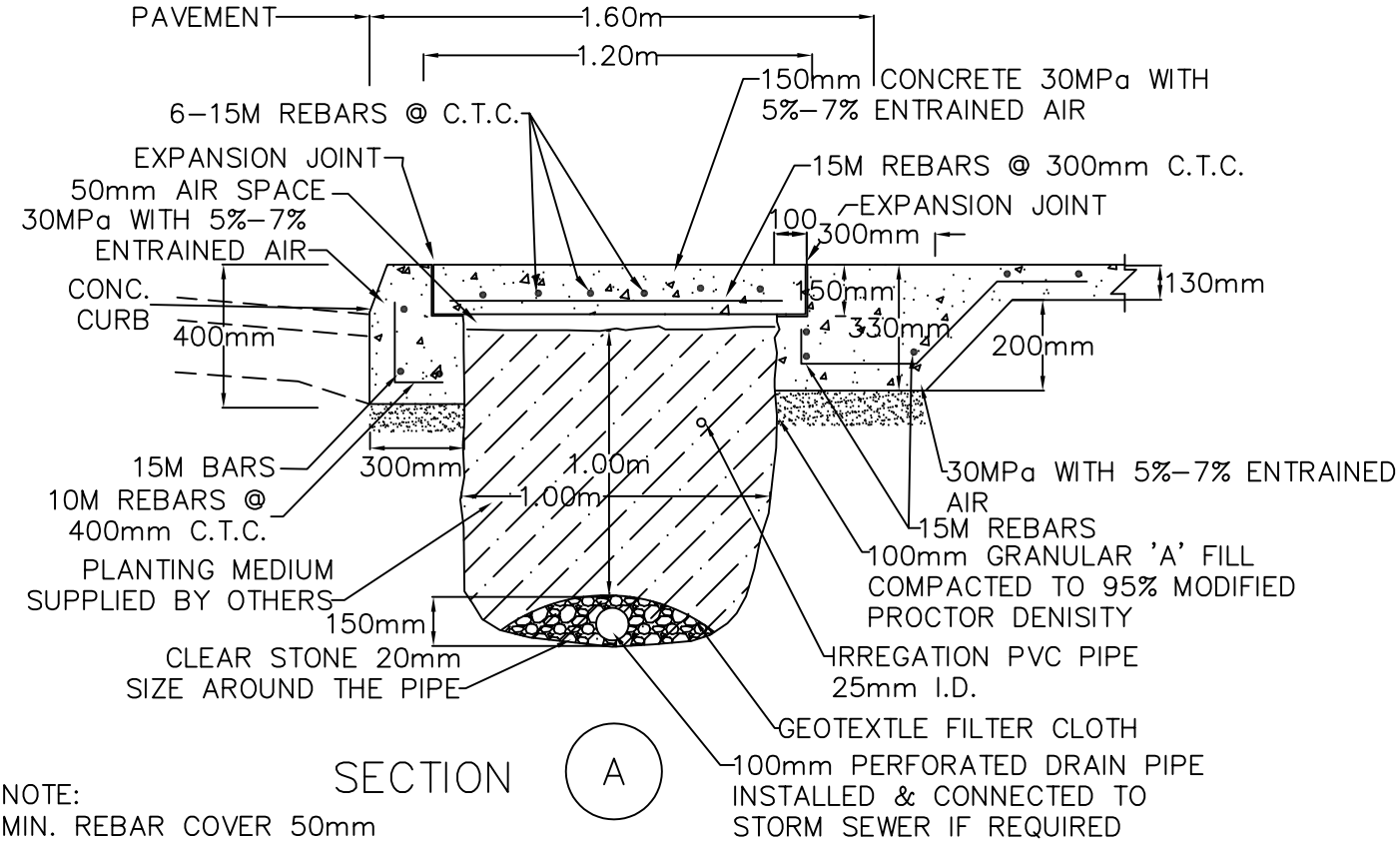

SECTION A

NOTE:
MIN. REBAR COVER 50mm
CONCRETE 30MPa WITH
5%-7% ENTRAINED AIR

METRIC
ALL DIMENSIONS SHOWN HERE ARE IN MILLIMETRES UNLESS OTHERWISE NOTED

	APPROVED BY	SCALE N.T.S.
TORONTO Works and Emergency Services	CONTINUOUS TREE PIT IN CONCRETE SIDEWALK AT CURB	DATE: MARCH,2002 REVISED: STANDARD No. T-310.050-3T4