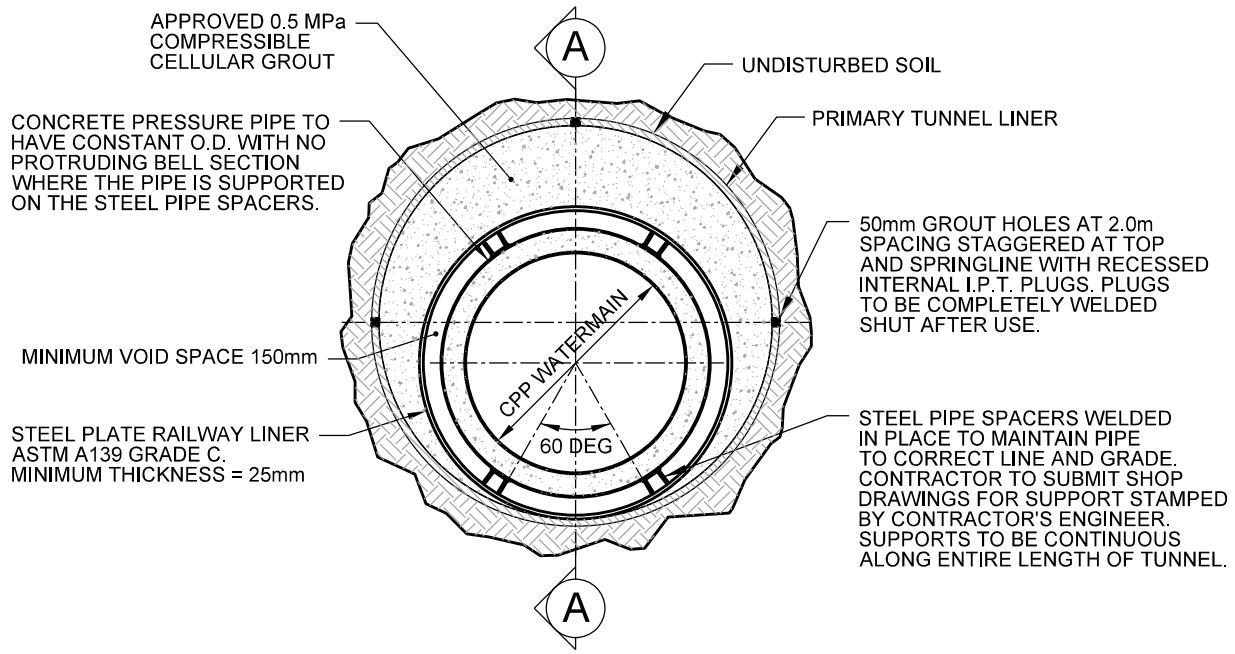

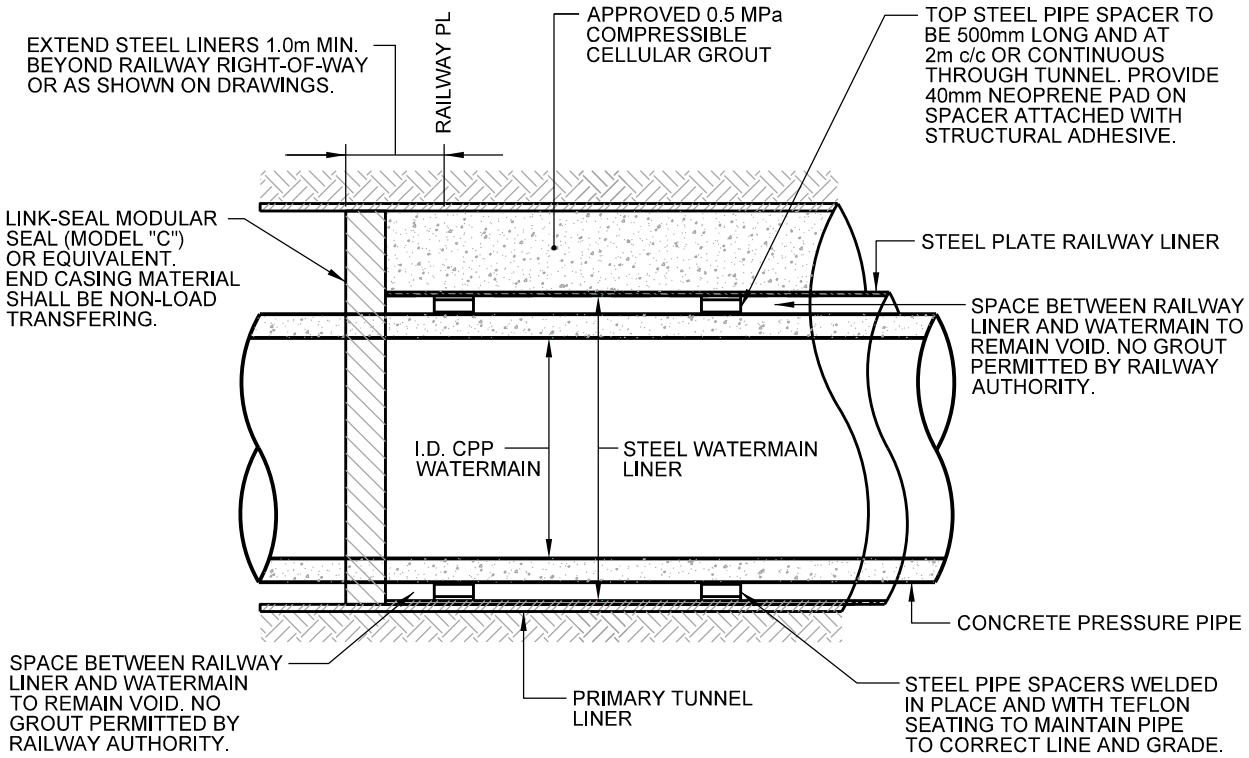

SECTION A-A

All dimensions are in millimetres unless otherwise shown.

TORONTO	ENGINEERING & CONSTRUCTION SERVICES STANDARD DRAWING	REV 0	APR 2017
	TUNNEL **RAILWAY CROSSING DETAIL** **PRESTRESSED CONCRETE CYLINDER PIPE**	**T-1110.05-1**	
		NTS	SHEET 1