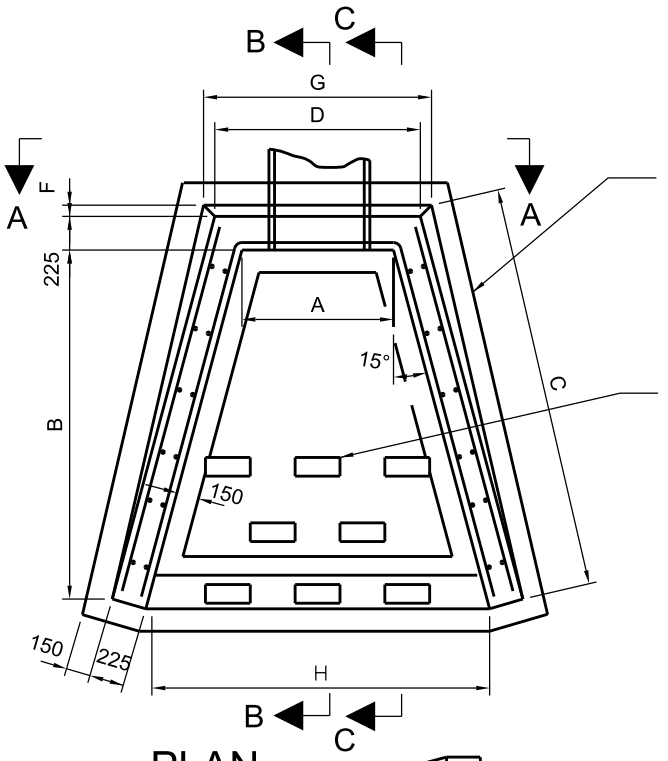

PLAN

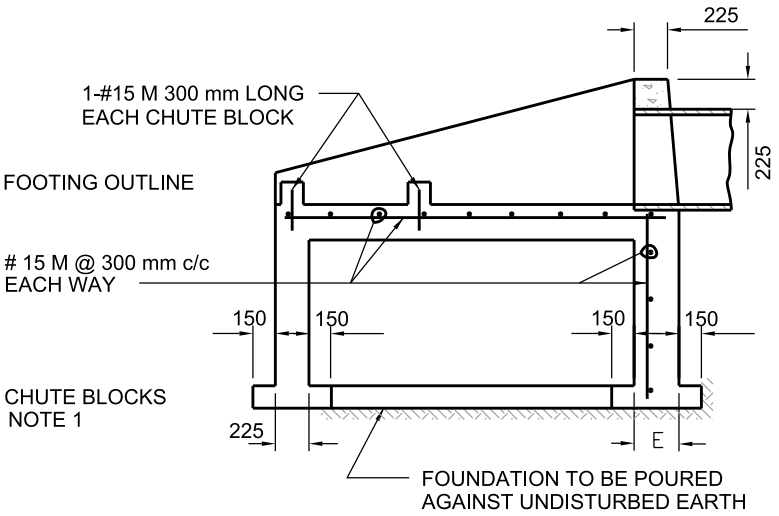

SECTION B

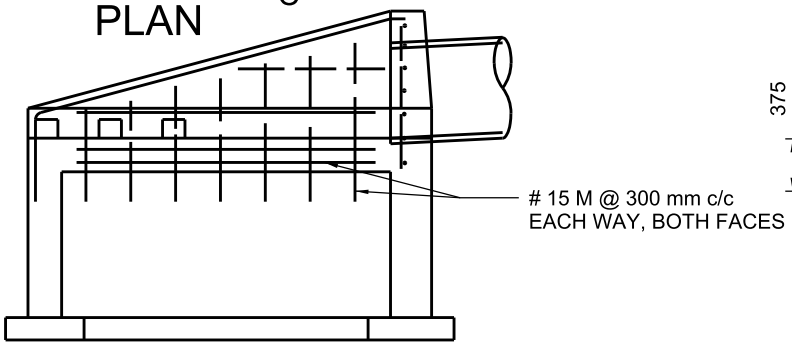

SECTION C

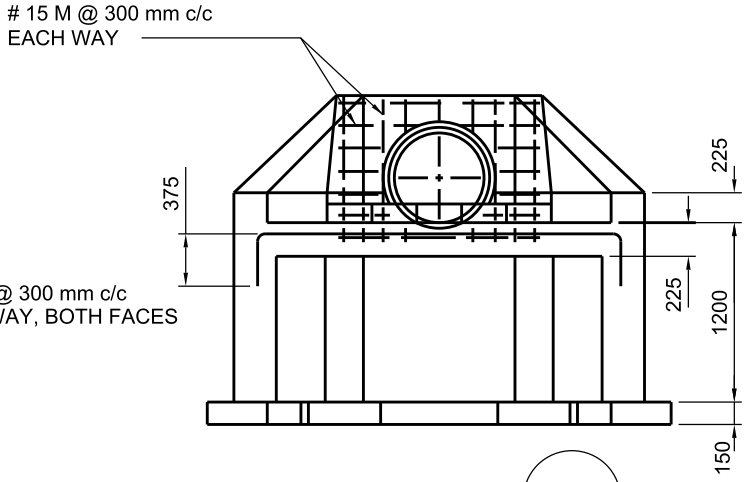

SECTION A

PIPE DIA (mm)	ENDWALL DIMENSIONS							
	A	B	C	D	E	F	G	H
600	1050	2400	2725	1400	300	75	1525	2350
675	1125	2400	2725	1475	300	75	1600	2425
750	1200	2400	2725	1550	300	75	1675	2500
825	1275	2400	2725	1625	300	75	1755	2575
900	1350	2400	2725	1700	300	75	1825	2650
975	1425	2400	2725	1775	375	150	1975	2725
1050	1500	3000	3400	1850	375	150	2050	3100
1200	1650	3000	3400	2000	375	150	2200	3250
1350	1800	3000	3400	2150	375	150	2350	3400
1500	1950	3000	3400	2300	375	150	2500	3550
1650	2100	3000	3400	2450	375	150	2650	3700
1800	2250	3000	3400	2600	375	150	2800	3850
2400	3000	3000	3400	3350	375	150	3550	4600

NOTES:

1. POURED CONCRETE CHUTE BLOCKS 300 x 200 x 100 mm HIGH OR AS SPECIFIED. (OPTIONAL).
2. CONCRETE TO BE 25 MPa COMPRESSIVE STRENGTH AT 28 DAYS WITH 5% TO 8% AIR ENTRAINMENT.
3. REINFORCING BARS TO HAVE 75 mm COVER.
4. GRANULAR BACKFILL TO BE PLACED TO 300 mm MIN THICKNESS ON ALL SIDES.
5. ALL DIMENSIONS ARE IN MILLIMETRES UNLESS OTHERWISE SHOWN.
6. INSTALL CHAIN LINK FENCE, SEE OPSD 900.04 ON TOP OF HEADWALL FOR WALLS THAT HAVE GREATER THAN 7 m VERTICAL DROP.

All dimensions are in millimetres unless otherwise shown.

TORONTO	ENGINEERING AND CONSTRUCTION SERVICES STANDARD DRAWING	REV 1	APR 2013
	CONCRETE HEADWALL FOR SEWER OR CULVERT PIPE	T-804.04	
		NTS	SHEET 1