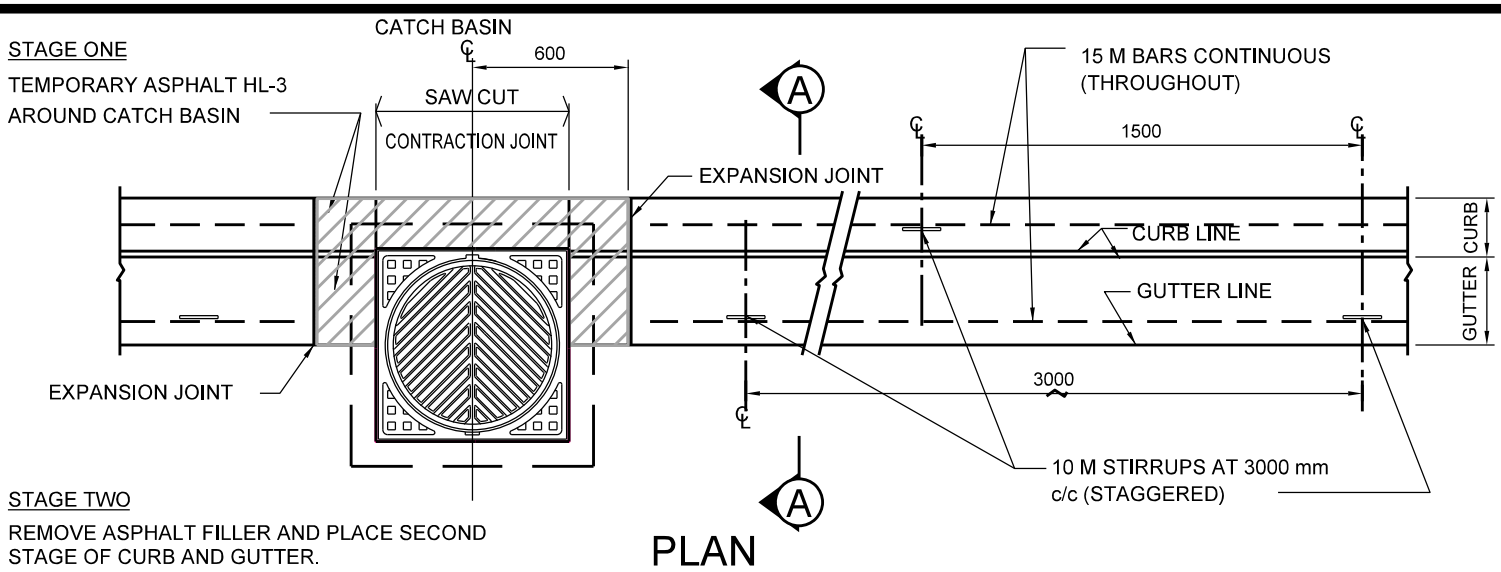

PLAN

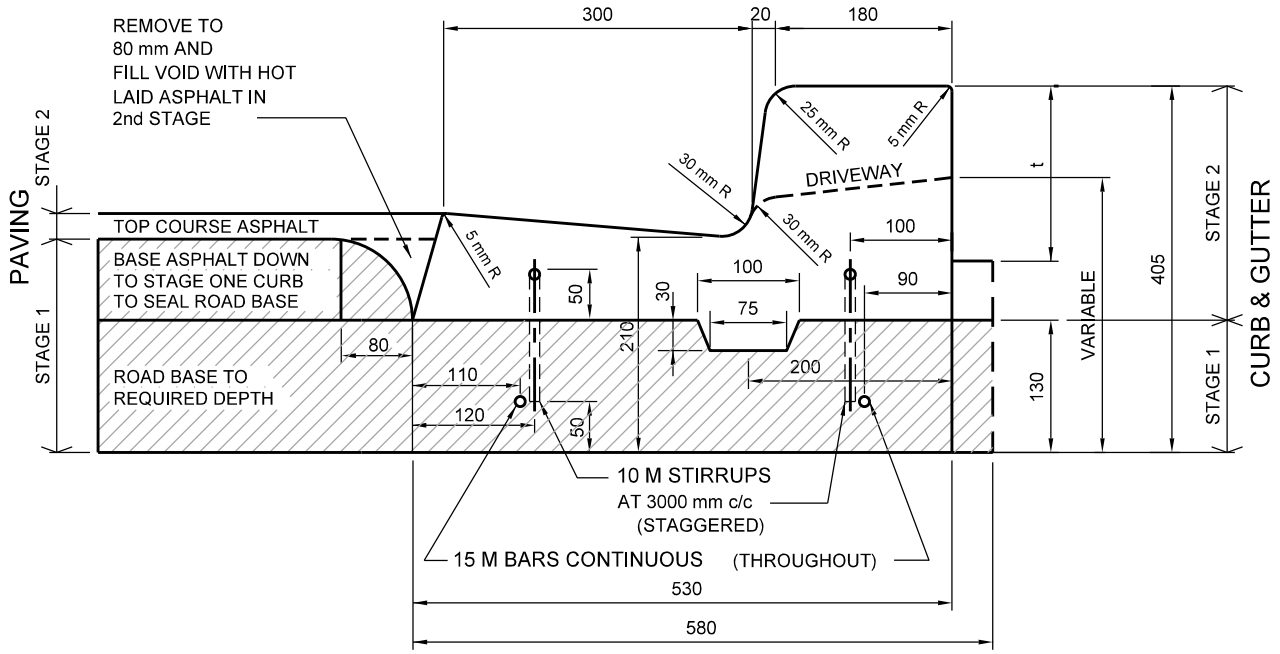

SECTION A - A

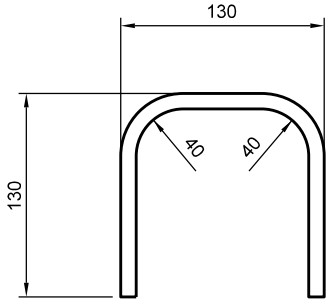

STIRRUPS DETAIL

10 M DEFORMED BAR

NOTES:

1. t = 130 mm, 150 mm OR 180 mm TO SUIT CONCRETE SIDEWALK, CONCRETE BOULEVARD, OR CONCRETE DRIVEWAY MEASURED FROM TOP OF CURB DEPRESSION.
2. CURB CUT END TAPERED 4:1.
3. STAGE-ONE TO BE THOROUGHLY CLEANED TO THE SATISFACTION OF THE CITY PRIOR TO STAGE TWO INSTALLATION.

All dimensions are in millimetres unless otherwise shown.

TORONTO	ENGINEERING & CONSTRUCTION SERVICES STANDARD DRAWING	REV 2	NOV 2014
	TWO - STAGE CURB AND GUTTER	**T-600.07-1**	
		NTS	SHEET 1