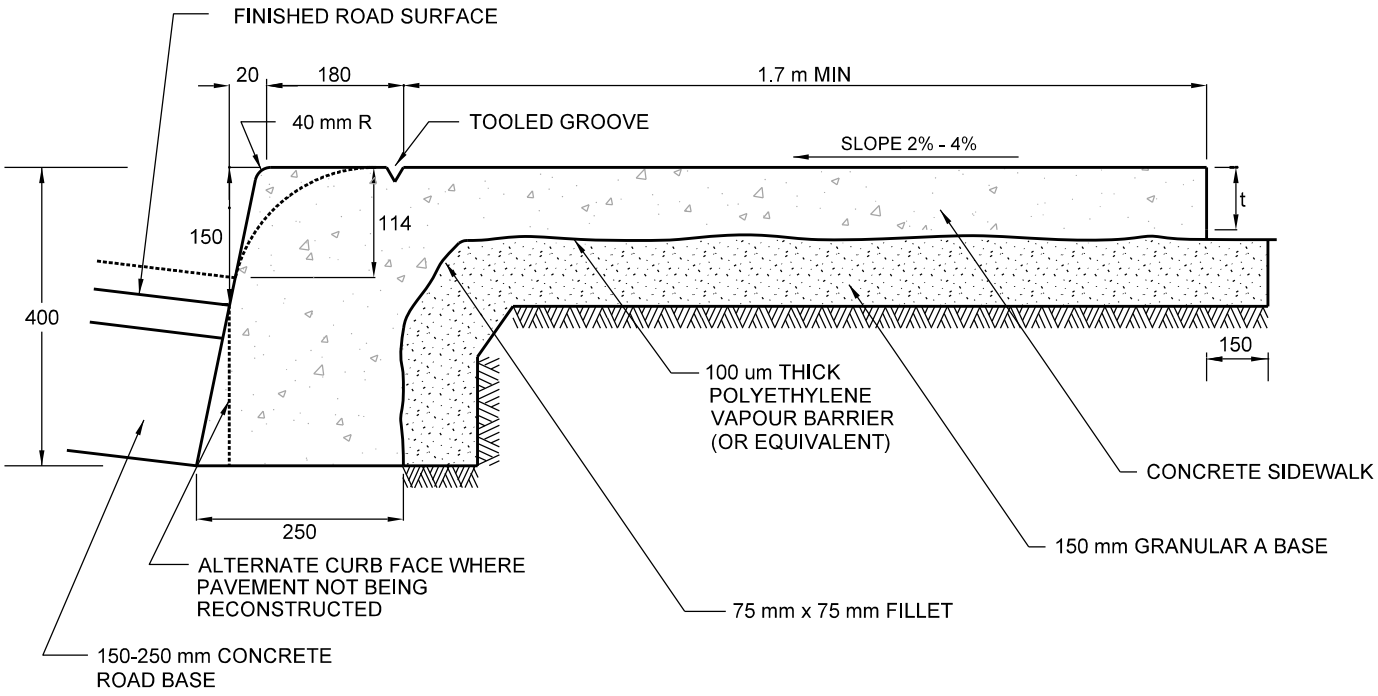

NOTES:

1. t = THICKNESS OF SIDEWALK.
2. SIDEWALK THICKNESS 150 mm EXCEPT ACROSS COMMERCIAL, INDUSTRIAL AND HIGH DENSITY RESIDENTIAL DRIVEWAY WHERE IT SHALL BE 180 mm.
3. JOINTS SHALL BE ACCORDING TO T-310.010-1.

All dimensions are in millimetres unless otherwise shown.

TORONTO	ENGINEERING & CONSTRUCTION SERVICES STANDARD DRAWING	REV 2	NOV 2014
	COMBINED CONCRETE CURB AND SIDEWALK	**T-310.010-4**	
		NTS	SHEET 1