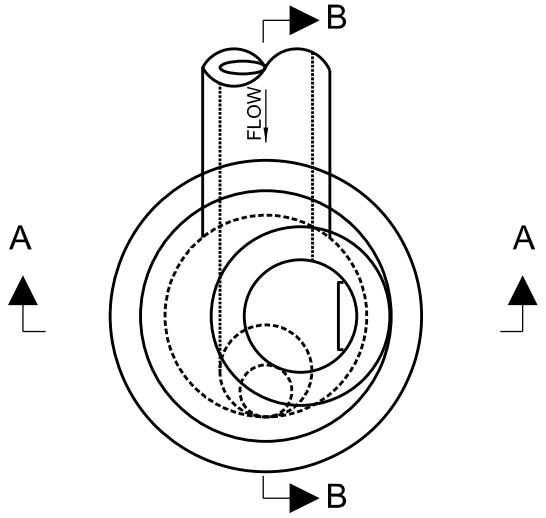

PLAN

CARBON STEEL BARS FOR CONCRETE REINFORCEMENT
AS PER CSA G30.18-09

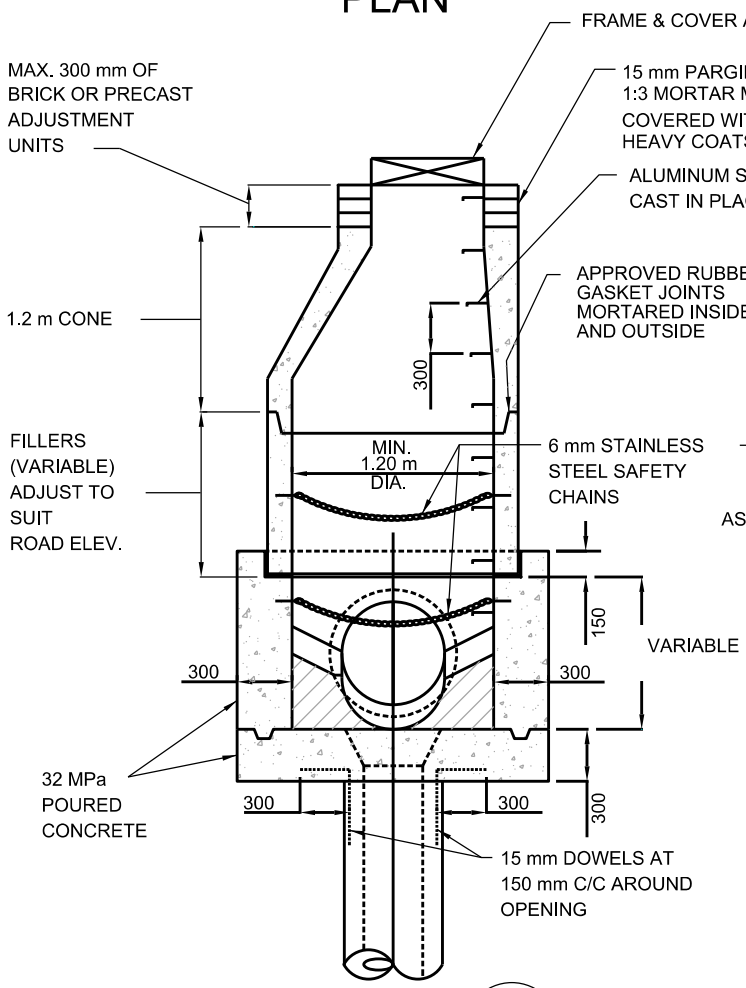

SECTION A

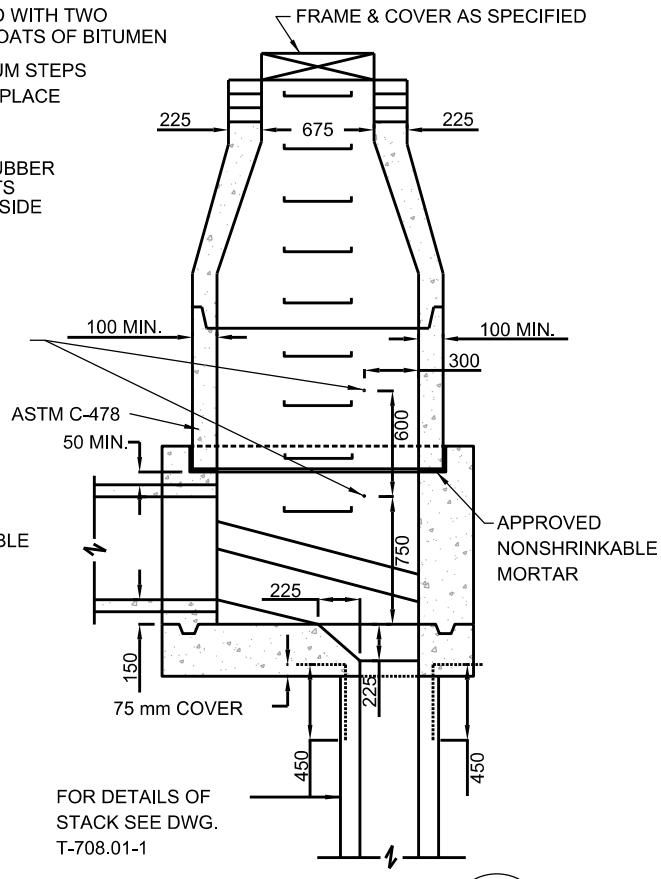

SECTION B

NOTE:

1. FIRST STEP TO BE 75 mm TO 300 mm BELOW FRAME. LAST STEP TO BE 300 mm ABOVE BENCHING OR 600 mm ABOVE INVERT IF NO BENCHING.

All dimensions are in millimetres unless otherwise shown.

TORONTO	ENGINEERING & CONSTRUCTION SERVICES STANDARD DRAWING	REV 2	NOV 2016
	PRECAST CONCRETE MAINTENANCE HOLE OVER STACK	**T-701.015-2**	
		NTS	SHEET 1