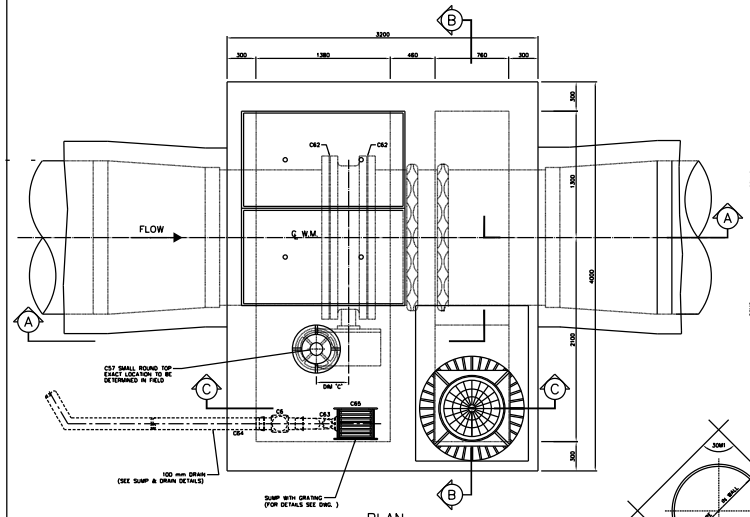

PLAN

CHAMBER No.	DIM. 'A'	DIM. 'B'	DIM. 'C'	DIM. 'D'	DIM. 'H'

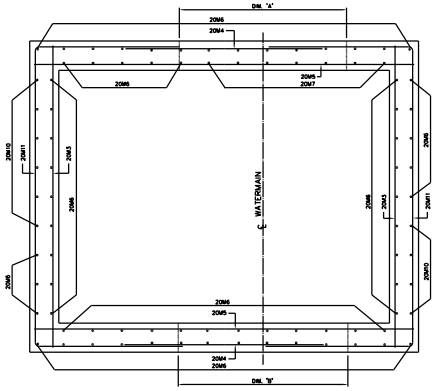

WALL SECTION

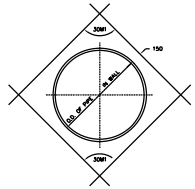

REINFORCING AROUND PIPE
NOT TO SCALE

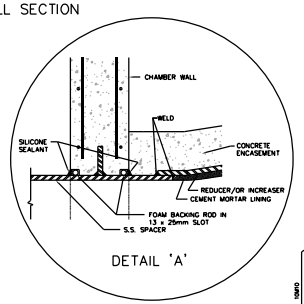

DETAIL 'A'

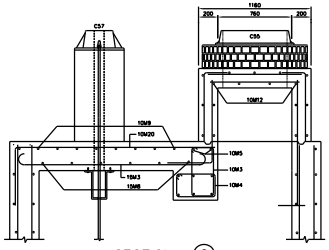

SECTION (C)

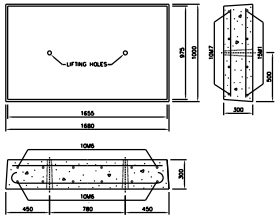

REMOVABLE SLAB
[2 REQUIRED]

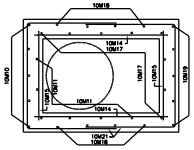

SECTION D–D

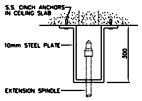

SPINDLE GUIDE BRACKET
NOT TO SCALE

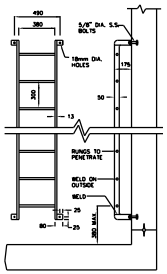

REMOVABLE ALUMINUM LADDER
NOT TO SCALE

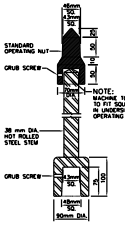

EXTENSION SPINDLE
NOT TO SCALE

RUNG DETAIL
FULL SIZE

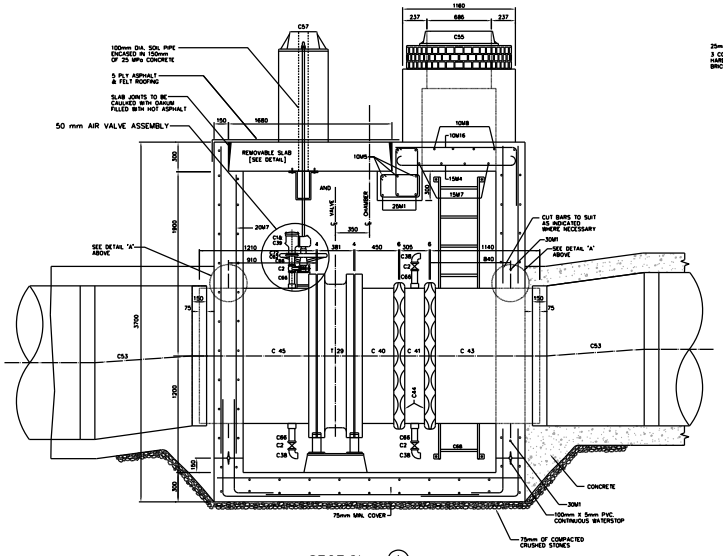

SECTION (A)

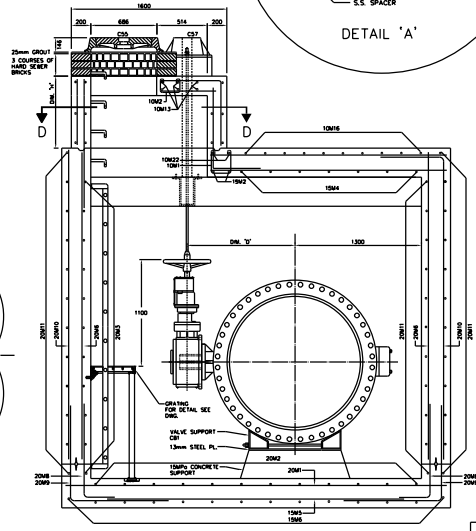

NOTE: FOR REINFORCING DETAIL AT THE DRAIN REFER TO DWG.

SECTION (B)

CHAMBERS

CHAMBER No.	CHAINAGE	WATERMAIN ℄ ELEV.	SURFACE ELEV.	DIFFERENCE IN ELEV.	COVER LOCATION	DRAIN		FOR LOCATION REFER TO PLAN No.	REMARKS
		IN METRES				TYPE	OUTLET DIA.		

NOTES

1. 25MPa CONCRETE TO BE USED EXCEPT AS NOTED.
2. MAXIMUM SIZE OF COARSE AGGREGATE TO BE 20mm
3. COVER TO MAIN REINFORCING TO BE 50mm OR AS INDICATED.
4. ALL BAR DIMENSIONS ARE OUT TO OUT.
5. BARS TO BE BENT COLD, MINIMUM INSIDE RADIUS TO 4 DIAMETERS.
6. ALL CROSSING BARS TO BE WELL WIRED.
7. ALL REINFORCING STEEL TO BE DEFORMED BILLET-STEEL BARS GRADE 350, CONFORMING TO C.S.A. STANDARD G30.12M
8. ALL LAPS IN REINFORCING STEEL TO BE AT LEAST 30 DIAMETERS IN LENGTH OR AS SHOWN, AND TO BE STAGGERED.
9. ALL BRICKWORK TO BE OF HIGH QUALITY HARD SEWER BRICK, LAID IN FULL MORTAR BED AND JOINTS, PARGED INSIDE AND OUTSIDE.
10. WATERSTOP [P.V.C.] TO BE PROVIDED AT ALL CONSTRUCTION JOINTS.
11. WHERE NECESSARY ADJUST REINFORCING STEEL TO SUIT WATERSTOPS AND OPENINGS.
12. PROVIDE SUMP PIT WITH GRATING AND SLOPE FLOOR TO SUMP 10mm/METRE.
13. DRAIN OUTLET TO BE LOCATED AT NEAREST POINT TO EXISTING SEWER.
14. DRAIN CONNECTION TO SEWER TO BE MADE BY CONTRACTOR UNLESS OTHERWISE NOTED IN THE GENERAL SPECIFICATIONS.
15. LADDERS, GRATINGS AND RAILINGS TO BE ALUMINUM AND OF REMOVABLE TYPE WITH STAINLESS STEEL BOLTS.
16. TOP TWO STEPS AND ANY ADDITIONAL STEPS IN THE CHIMNEY TO BE OF THE REMOVABLE TYPE.
17. CHAMBERS DEEPER THAN 1200mm FROM SURFACE ELEVATION TO TOP OF VALVE OPERATING SPINDLE SHALL HAVE EXTENSION SPINDLE AND GUIDE BRACKET.
18. ALL ALUMINUM SURFACES CONTACTING CONCRETE TO RECEIVE ONE COAT OF BITUMINOUS PAINT.
19. 'X' DEPENDS ON HEIGHT OF CHIMNEY [DIM.'H'] AND BARS SHALL BE COUNTED TO ENSURE THAT THE BOTTOM BAR IS LESS THAN 150mm ABOVE THE CHAMBER ROOF.

BENDING SCHEDULE

BAR No.	DIA.	TOTAL LENGTH	DIMENSIONS a	b	c	d	SHAPE	O.C.	No. REQ'D.
10M1	10	900	220	220	220			200	7
10M2		710	120	230	120			150	8
10M3		1640	520	230	520	230		200	20
10M4		1340	380	220	380	220		200	20
10M5		3900					STRAIGHT	AS SHOWN	5
10M6		900						300	24
10M7		1580						300	8
10M8		2400						200	4
10M9		1600						200	8
10M10		H-100						300	5
10M11		H+600						300	6
10M12		614						300	4
10M13		1060						200	6
10M14		1500						300	"X"
10M15		1060						300	"X"
10M16		1850	1270	600				200	10
10M17		H+630	H+200	450				300	8
10M18		H+180	H-100	300				300	8
10M19		H+494	H-100	614				300	5
10M20		2620	2040	600				200	6
10M21		2820	900	1060	900			300	"X"
10M22		4260	600	3100	600			AS SHOWN	2
15M1	15	1940	1560					AS SHOWN	8
15M2		3460	3100					AS SHOWN	2
15M3		2400	2040					200	6
15M4		1630	1270					300	7
15M5		3000					STRAIGHT	300	11
15M6		2200						300	14
15M7		2400						300	4
15M8		1600						300	7
20M1	20	3900					STRAIGHT	300	9
20M2		3100						300	12
20M3		3100						300	22
20M4		2000						300	24
20M5		3900						300	22
20M6		3150						300	71
20M7		2850						300	7
20M8		1310	1050	300				300	42
20M9		2060	1050	1050				300	46
20M10		3710	3150	600				300	10
20M11		6120	1550	3100	1550			300	24
25M1	25	4460	3900					AS SHOWN	3
30M1	30	O.D.+600					STRAIGHT	AS SHOWN	8

FOR REINFORCING AT DRAIN REFER TO SUMP AND DRAIN DETAIL DWG.

MATERIAL LIST

MARK	SUPPLIED BY CONTRACTOR
T29	1-1200mm HORIZONTAL BUTTERFLY VALVE

MARK	SUPPLIED BY CONTRACTOR
C1	1-50 mm AIR VALVE (FLANGED) [VENT-O-MAT RBX]
C2	4-50mm BALL VALVES SS BODY/BALL TEFLON SEAT
C6	1-100mm BACKWATER CHECK VALVE
C57	1-SMALL ROUND TOP
C38	3-50mm SS304L Sch40 STREET ELBOW
C39	1-13mm MALE INLET 5mm FAUCET, ROUGH BRASS WITH HOSE END. EMCO No. 3710 OR EQUIVALENT
C61	4-M16 x 55mm S.S. BOLTS & NUTS
C62	1-50mm GASKET [FULL FACE, ONE PIECE]
C66	50mm SS304L Sch40 NIPPLE THREADED BOTH ENDS: 3-150mm LONG FOR DRAIN VALVE ASSEMBLIES
C66	50mm SS304L Sch40 NIPPLE THREADED BOTH ENDS: 1-125 mm LONG AND 1-175 mm LONG FOR AIR VALVE ASSEMBLY
C72	1-50mm THREADED FLANGE, CLASS 125, FLAT FACED AND DRILLED

MARK	SUPPLIED BY CONTRACTOR
C40	1-1200mm FABRICATED S.S. FL.-VICT. CONNECTION
C41	1-1200mm FABRICATED S.S. VICT.-VICT. SPACER
C43	1-1200mm FABRICATED S.S. VICTAULIC CONNECTION
C44	2-1200mm VICT. COUPLINGS, STYLE 44 SHOULDERED
C45	1-1200mm FABRICATED S.S. FLANGE ASSEMBLY
C53	2-1350mm TO 1200mm ECCENTRIC REDUCERS
C55	1-CAST IRON, SQUARE FRAME WITH CIRCULAR COVER AND PLUG FOR VALVE CHAMBERS AS PER OPSD-402.010
C61	6-CINCH ANCHORS WITH M16 S.S. BOLTS & NUTS
C61	80-M45 x 216mm SS BOLTS AND NUTS
C61	8-M45 x 260mm LG. S.S. STUDS EACH WITH 1 NUT [6 UNC]
C62	2-1200mm DIA. CLOTH INSERTED RUBBER GASKETS [FULL FACE, ONE PIECE]
C63	1-C.I. RUNNING TRAP WITH CLEANOUT AND COVER
C64	1-100mm DIA. PVC PIPING
C65	1-SUMP FRAME AND GRATING
C68	1-STANDARD ALUMINUM LADDER AND STEPS
C75	1-STEEL PLATE, 340mm x 940mm x 6mm
C81	2-STANDARD BUTTERFLY VALVE SUPPORTS

O FOR DRAIN TYPE 'A' AND 'C' ONLY
FOR DRAIN TYPE 'B' ONLY

FOR DETAILS OF C40, C41, C43, C45 AND C81 SEE DWG.

TORONTO Water

No.	DATE	REVISIONS	INITIAL	SIGNED

TORONTO Engineering & Construction Services

GENERAL MANAGER, TORONTO WATER

DIRECTOR, Design and Construction Linear Underground Infrastructure

CHIEF ENGINEER AND EXECUTIVE DIRECTOR, Engineering & Construction Services

MANAGER, Design and Construction Linear Underground Infrastructure

Title
Subtitle1
Subtitle2

1200 mm HORIZONTAL BUTTERFLY VALVE CHAMBER (Position B)

DESIGN	Design	DRAWN	Drawn	CHECKED	Checked	CONTRACT No.X-X	
SCALE	SCALE			DRAWING NUMBER	T-1110.11-2		SHEET X OF X
DATE	DATE						