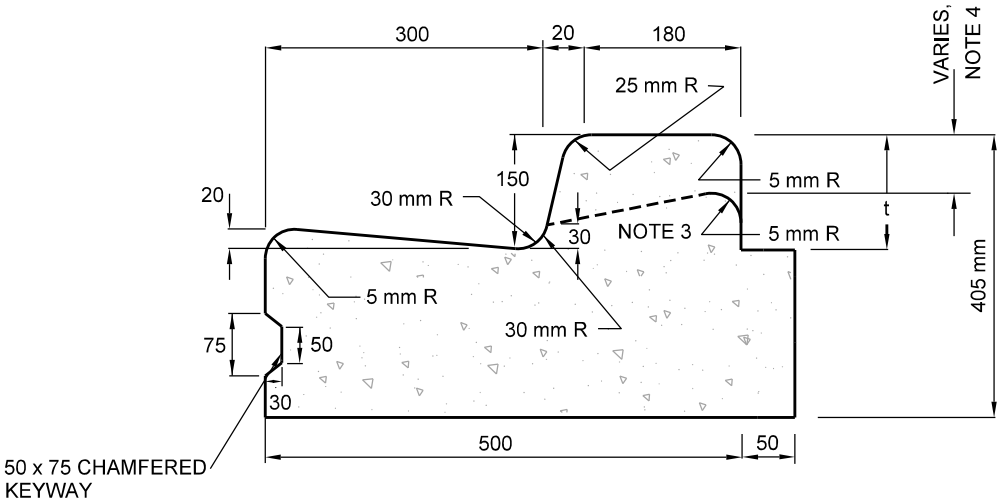

FOR USE WITH RIGID PAVEMENT

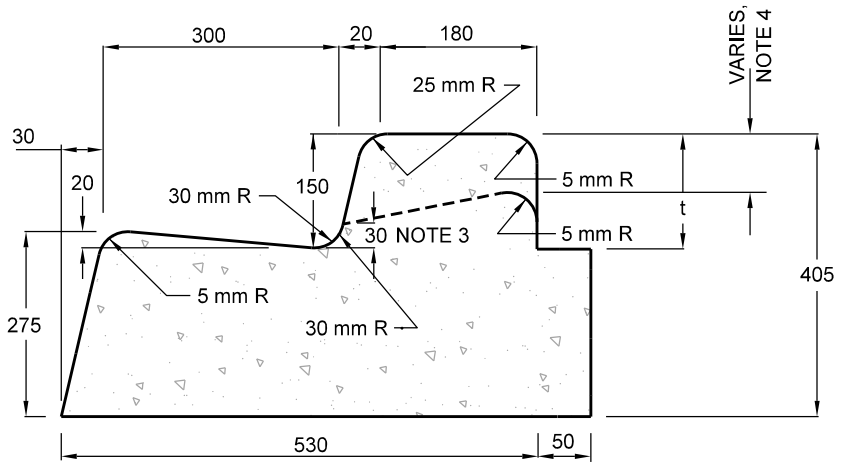

FOR USE WITH FLEXIBLE PAVEMENT

NOTES:

1. EXPANSION/CONTRACTION JOINTS SHALL BE SPACED 6 m APART OR COINCIDE WITH JOINTS IN ADJACENT SIDEWALK AND CONCRETE ROAD BASE.
2. t =130 mm, 150 mm OR 180 mm TO SUIT CONCRETE SIDEWALK, CONCRETE BOULEVARD OR CONCRETE DRIVEWAY MEASURED FROM THE TOP OF CURB DEPRESSION.
3. 10 mm FOR SIDEWALK RAMPS AND DISABILITY ACCESSES.
4. ENTRANCE TERMINATION ACCORDING TO DRAWING T-350.01. DROP CURB AT ENTRANCE, TYP. 70-100 mm, DEPENDS ON SITE CONDITION AS SPECIFIED.
5. 2-15 M REINFORCING BARS FOR INDUSTRIAL DRIVEWAYS, 50 mm CONCRETE COVER, TO BE EXTENDED 600 mm BEYOND WIDTH OF DRIVEWAY ON EACH END.

All dimensions are in millimetres unless otherwise shown.

TORONTO	ENGINEERING & CONSTRUCTION SERVICES STANDARD DRAWING	REV 3	NOV 2014
	CONCRETE CURB AND GUTTER	**T-600.05-1**	
		NTS	SHEET 1