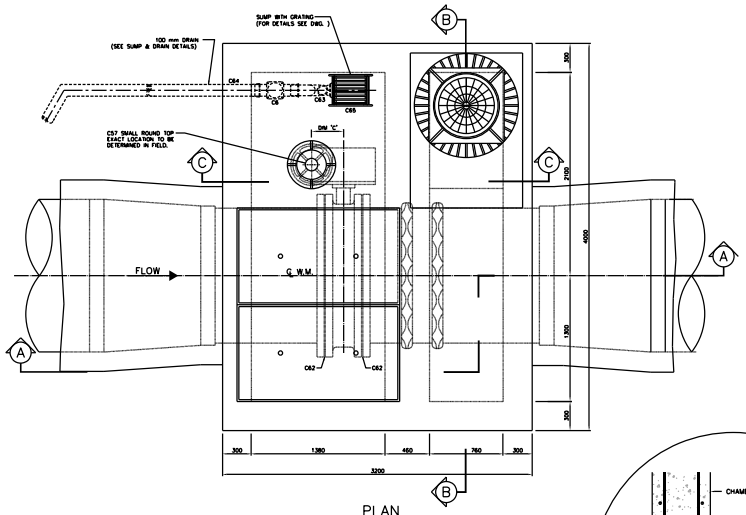


PLAN

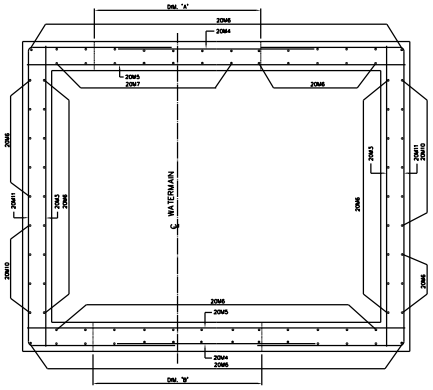


WALL SECTION

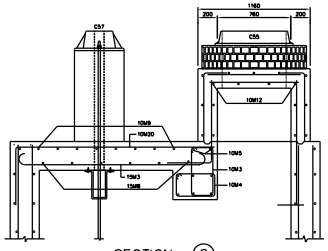

SECTION (C)

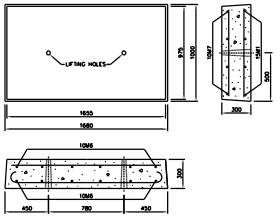


REMOVABLE SLAB
[ 2 REQUIRED ]

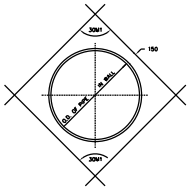

REINFORCING AROUND PIPE
NOT TO SCALE

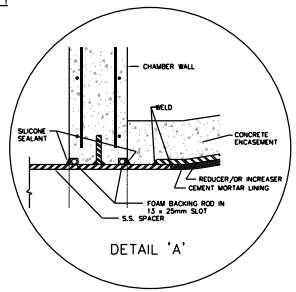


DETAIL 'A'

| CHAMBER No. | DIM. 'A' | DIM. 'B' | DIM. 'C' | DIM. 'D' | DIM. 'W' |
|---|---|---|---|---|---|
| | | | | | |
| | | | | | |
| | | | | | |

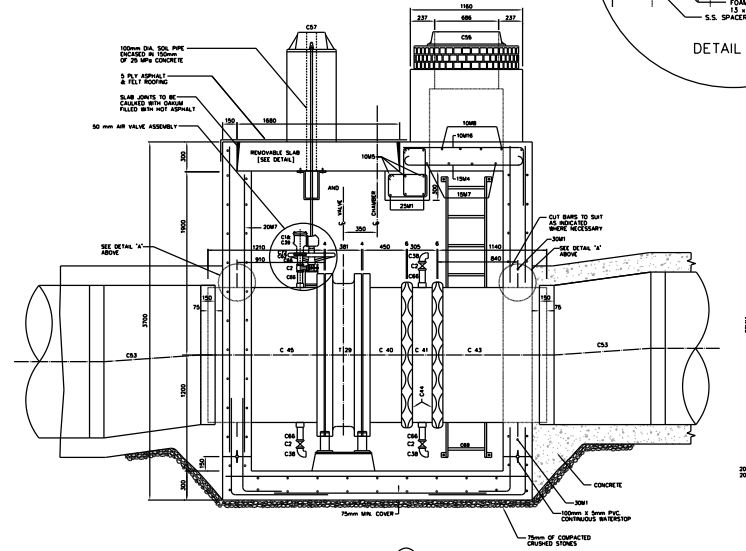


SECTION (A)

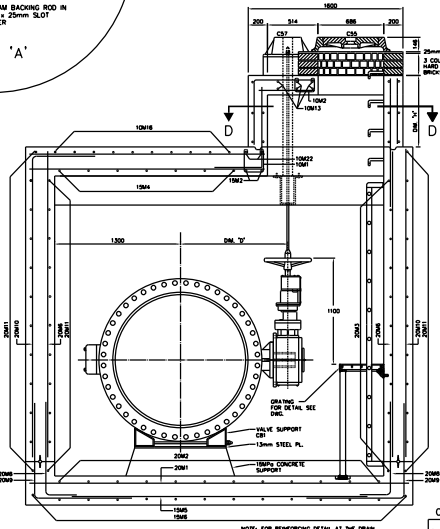


SECTION (B)

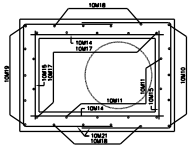

SECTION D-D

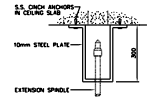


SPINDLE GUIDE BRACKET
NOT TO SCALE

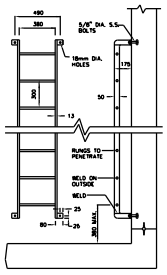


REMOVABLE ALUMINUM LADDER
NOT TO SCALE

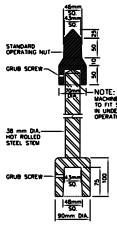


EXTENSION SPINDLE
NOT TO SCALE

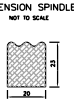

RUNG DETAIL
FULL SIZE

## CHAMBERS

| CHAMBER No. | CHAINAGE | WATERMAIN ℄ ELEV. | SURFACE ELEV. | DIFFERENCE IN ELEV. | COVER LOCATION | DRAIN | | FOR LOCATION REFER TO PLAN No. | REMARKS |
|---|---|---|---|---|---|---|---|---|---|
| | | IN METRES | | | | TYPE | OUTLET DIR. | | |
| | | | | | | | | | |
| | | | | | | | | | |

## NOTES

1. 25MPa CONCRETE TO BE USED EXCEPT AS NOTED.
2. MAXIMUM SIZE OF COARSE AGGREGATE TO BE 20mm
3. COVER TO MAIN REINFORCING TO BE 50mm OR AS INDICATED.
4. ALL BAR DIMENSIONS ARE OUT TO OUT.
5. BARS TO BE BENT COLD, MINIMUM INSIDE RADIUS TO 4 DIAMETERS.
6. ALL CROSSING BARS TO BE WELL WIRED.
7. ALL REINFORCING STEEL TO BE DEFORMED BILLET-STEEL BARS GRADE 350, CONFORMING TO C.S.A. STANDARD G30.12M
8. ALL LAPS IN REINFORCING STEEL TO BE AT LEAST 30 DIAMETERS IN LENGTH OR AS SHOWN, AND TO BE STAGGERED.
9. ALL BRICKWORK TO BE OF HIGH QUALITY HARD SEWER BRICK, LAID IN FULL MORTAR BED AND JOINTS, PARGED INSIDE AND OUTSIDE.
10. WATERSTOP [P.V.C.] TO BE PROVIDED AT ALL CONSTRUCTION JOINTS.
11. WHERE NECESSARY ADJUST REINFORCING STEEL TO SUIT WATERSTOPS AND OPENINGS.
12. PROVIDE SUMP PIT WITH GRATING AND SLOPE FLOOR TO SUMP 10mm/METRE.
13. DRAIN OUTLET TO BE LOCATED AT NEAREST POINT TO EXISTING SEWER.
14. DRAIN CONNECTION TO SEWER TO BE MADE BY CONTRACTOR UNLESS OTHERWISE NOTED IN THE GENERAL SPECIFICATIONS.
15. LADDERS, GRATINGS AND RAILINGS TO BE ALUMINUM AND OF REMOVABLE TYPE WITH STAINLESS STEEL BOLTS.
16. TOP TWO STEPS AND ANY ADDITIONAL STEPS IN THE CHIMNEY TO BE OF THE REMOVABLE TYPE.
17. CHAMBERS DEEPER THAN 1200mm FROM SURFACE ELEVATION TO TOP OF VALVE OPERATING SPINDLE SHALL HAVE EXTENSION SPINDLE AND GUIDE BRACKET.
18. ALL ALUMINUM SURFACES CONTACTING CONCRETE TO RECEIVE ONE COAT OF BITUMINOUS PAINT.
19. "X" DEPENDS ON HEIGHT OF CHIMNEY [DIM."H"] AND BARS SHALL BE COUNTED TO ENSURE THAT THE BOTTOM BAR IS LESS THAN 150mm ABOVE THE CHAMBER ROOF.

## BENDING SCHEDULE

| BAR No. | DIA. | TOTAL LENGTH | DIMENSIONS a | b | c | d | SHAPE | O.C. | No. REQ'D. |
|---|---|---|---|---|---|---|---|---|---|
| 10M1 | 10 | 900 | 220 | 220 | 220 | | | 200 | 7 |
| 10M2 | | 710 | 120 | 230 | 120 | | | 150 | 8 |
| 10M3 | | 1640 | 520 | 230 | 520 | 230 | | 200 | 20 |
| 10M4 | | 1340 | 380 | 220 | 380 | 220 | | 200 | 20 |
| 10M5 | | 3900 | | | | | STRAIGHT | AS SHOWN | 5 |
| 10M6 | | 900 | | | | | | 300 | 24 |
| 10M7 | | 1580 | | | | | | 300 | 8 |
| 10M8 | | 2400 | | | | | | 200 | 4 |
| 10M9 | | 1600 | | | | | | 200 | 8 |
| 10M10 | | H-100 | | | | | | 300 | 5 |
| 10M11 | | H+600 | | | | | | 300 | 6 |
| 10M12 | | 614 | | | | | | 300 | 4 |
| 10M13 | | 1060 | | | | | | 200 | 6 |
| 10M14 | | 1500 | | | | | | 300 | "X" |
| 10M15 | | 1060 | | | | | | 300 | "X" |
| 10M16 | | 1850 | 1270 | 600 | | | | 200 | 10 |
| 10M17 | | H+630 | H+200 | 450 | | | | 300 | 8 |
| 10M18 | | H+180 | H-100 | 300 | | | | 300 | 8 |
| 10M19 | | H+494 | H-100 | 614 | | | | 300 | 5 |
| 10M20 | | 2620 | 2040 | 600 | | | | 200 | 6 |
| 10M21 | | 2820 | 900 | 1060 | 900 | | | 300 | "X" |
| 10M22 | | 4260 | 600 | 3100 | 600 | | | AS SHOWN | 2 |
| 15M1 | 15 | 1940 | 1580 | | | | | AS SHOWN | 8 |
| 15M2 | | 3460 | 3100 | | | | | AS SHOWN | 2 |
| 15M3 | | 2400 | 2040 | | | | | 200 | 6 |
| 15M4 | | 1630 | 1270 | | | | | 300 | 7 |
| 15M5 | | 3000 | | | | | STRAIGHT | 300 | 11 |
| 15M6 | | 2200 | | | | | | 300 | 14 |
| 15M7 | | 2400 | | | | | | 300 | 4 |
| 15M8 | | 1600 | | | | | | 300 | 7 |
| 20M1 | 20 | 3900 | | | | | | 300 | 9 |
| 20M2 | | 3100 | | | | | | 300 | 12 |
| 20M3 | | 3100 | | | | | | 300 | 22 |
| 20M4 | | 2000 | | | | | STRAIGHT | 300 | 24 |
| 20M5 | | 3900 | | | | | | 300 | 22 |
| 20M6 | | 3150 | | | | | | 300 | 71 |
| 20M7 | | 2850 | | | | | | 300 | 7 |
| 20M8 | | 1310 | 1050 | 300 | | | | 300 | 42 |
| 20M9 | | 2060 | 1050 | 1050 | | | | 300 | 46 |
| 20M10 | | 3710 | 3150 | 600 | | | | 300 | 10 |
| 20M11 | | 6120 | 1550 | 3100 | 1550 | | | 300 | 24 |
| 25M1 | 25 | 4460 | 3900 | | | | | AS SHOWN | 3 |
| 30M1 | 30 | O.D.=600 | | | | | STRAIGHT | AS SHOWN | 8 |

FOR REINFORCING AT DRAIN REFER TO SUMP AND DRAIN DETAIL DWG.

## MATERIAL LIST

| MARK | SUPPLIED BY CONTRACTOR |
|---|---|
| T29 | 1-1200mm HORIZONTAL BUTTERFLY VALVE |

| MARK | SUPPLIED BY CONTRACTOR |
|---|---|
| C1 | 1-50 mm AIR VALVE (FLANGED) (VENT-O-MAT R69) |
| C2 | 4-50mm BALL VALVES SS BODY/BALL TEFLON SEAT |
| C6 | 1-100mm BACKWATER CHECK VALVE |
| C57 | 1-SMALL ROUND TOP |
| C38 | 3-50mm SS304L Sch40 STREET ELBOW |
| C39 | 1-13mm MALE INLET SNM FAUCET, ROUGH BRASS WITH HOSE END, ENCO No. 3710 OR EQUIVALENT |
| C61 | 4-M16 x 55mm S.S. BOLTS & NUTS |
| C62 | 1-50mm GASKET [FULL FACE, ONE PIECE] |
| C66 | 50mm SS304L Sch40 NIPPLE THREADED BOTH ENDS; 3-150mm LONG FOR DRAIN VALVE ASSEMBLES |
| C66 | 50mm SS304L Sch40 NIPPLE THREADED BOTH ENDS; 1-125 mm LONG AND 1-175 mm LONG FOR AIR VALVE ASSEMBLY |
| C72 | 1-50mm THREADED FLANGE, CLASS 125, FLAT FACED AND DRILLED |

| MARK | SUPPLIED BY CONTRACTOR |
|---|---|
| C40 | 1-1200mm FABRICATED S.S. FL.-VCT. CONNECTION |
| C41 | 1-1200mm FABRICATED S.S. VCT.-VCT. SPACER |
| C43 | 1-1200mm FABRICATED S.S. VCTAULIC CONNECTION |
| C44 | 2-1200mm VCT. COUPLINGS, STYLE 44 SHOULDERED |
| C45 | 1-1200mm FABRICATED S.S. FLANGE ASSEMBLY |
| C53 | 2-1350mm TO 1200mm ECCENTRIC REDUCERS |
| C55 | 1-CAST IRON, SQUARE FRAME WITH CIRCULAR COVER AND PLUG FOR VALVE CHAMBERS AS PER OPSD-402.010 |
| C61 | 6-CINCH ANCHORS WITH M16 S.S. BOLTS & NUTS |
| C61 | 80-M45 x 216mm SS BOLTS AND NUTS |
| C61 | 8-M45 x 260mm LG. S.S. STUDS EACH WITH 1 NUT [6 UNC] |
| C62 | 2-1200mm DIA. CLOTH INSERTED RUBBER GASKETS [ FULL FACE, ONE PIECE ] |
| C63 | 1-C.I. RUNNING TRAP WITH CLEANOUT AND COVER |
| C64 | 1-100mm DIA. PVC PIPING |
| C65 | 1-SUMP FRAME AND GRATING |
| C68 | 1-STANDARD ALUMINUM LADDER AND STEPS |
| C75 | 1-STEEL PLATE, 340mm x 940mm x 8mm |
| C81 | 2-STANDARD BUTTERFLY VALVE SUPPORTS |

O FOR DRAIN TYPE 'A' AND 'C' ONLY
FOR DRAIN TYPE 'B' ONLY

FOR DETAILS OF C40, C41, C43, C45 AND C81 SEE DWG.

TORONTO Water

| No. | DATE | REVISIONS | INITIAL | SIGNED |
|---|---|---|---|---|
| | | | | |

TORONTO Engineering & Construction Services

GENERAL MANAGER, TORONTO WATER

DIRECTOR, Design and Construction Linear Underground Infrastructure

CHIEF ENGINEER AND EXECUTIVE DIRECTOR, Engineering & Construction Services

MANAGER, Design and Construction Linear Underground Infrastructure

Title
Subtitle1
Subtitle2

1200 mm HORIZONTAL BUTTERFLY VALVECHAMBER (Position A)

| DESIGN | Design | DRAWN | Drawn | CHECKED | Checked | CONTRACT No.X-X |
|---|---|---|---|---|---|---|
| SCALE | SCALE | | | DRAWING NUMBER | T-1110.11-1 | SHEET X OF X |
| DATE | DATE | | | | | |